LAYOUT PLAN

1:500 at A1
1:1000 at A3

LEGEND

- Existing water
- Existing stormwater (open watercourse)
- Existing stormwater (culvert / piped)
- Existing power (underground)
- Existing power (overhead)
- Existing property boundary
- Existing septic tanks to be decommissioned (see General Notes)
- Proposed pump station (see Pump Station Notes)
- FP Flushing Point Kit (see Note 5)
- V Isolation Valve Kit (see Note 5)
- BC Boundary Connection Kit (see Note 5)
- Proposed Rising Main PN16 40 mm OD PE100
- Proposed Rising Main PN16 50 mm OD PE100
- Proposed Rising Main PN16 63 mm OD PE100

GENERAL NOTES

1. Services locations shown on the plans are indicative only, and may be incomplete. Location of all existing services to be confirmed on site prior to commencing of any works.
2. Existing septic tanks to be decommissioned where shown. Upon completion of new pump stations and foul sewer system, drain, disinfect, cut hole in base, cut roof of tank, collapse in and fill existing septic tank.
3. New underground power supply to pump stations to be taken from property building - confirm location of power route on site.
4. All trench work to be reinstated as per existing.
5. See accompanying AquaTec drawings for kit details
6. Minimum bend radius 2.0m

PUMP STATION NOTES

Pressure Sewer Pump units to be as follow:

- Royal Engineers Office (REO) and Slaughter Bay - Aquatec Simplex OGT 1500L + 1100L SV storage
- All other pumps - Aquatec Enduraplex OGT 950L

SURFACE DATA

- Surface levels have been based on the scale 1 data and coordinate system used to prepare the detail survey (provided by Abbott & Macro) for the KAVHA project site

Revision		Des	Drn	Rvd	App	Date
B	For Detailed Design	ACS	ESG	ACS	ACS	19/10/23
A	For Detailed Design	ACS	ESG	ACS	ACS	24/08/23

Verify all dimensions on site before commencing work. Prioritise figured dimensions over scaling. Refer all discrepancies to the drawing office. This document and the copyright in this document remain the property of Fluent Infrastructure Solutions Ltd. The contents of this document may not be reproduced either in whole or in part by any means whatsoever without the prior written consent of Fluent Infrastructure Solutions Ltd.

Fluent SOLUTIONS
www.fluentsolutions.co.nz

Client: Australian Government, Department of Infrastructure, Transport, Regional Development and Communications

Project Title: Norfolk Island
KAVHA Wastewater Scheme

Sheet Title: Stage 3
Lone Pine
Layout Plan

Scale (A1 Original): 1:500 m
Issue: For Detailed Design

Project No	Sheet	Revision
000770	C401	B

File: Z:\2_Jobs\000761 - 000770\000770 - Norfolk Island WW-STG 2&3\6_Drawings\04_Production\Stage 3\PRO_000770_Stage 3_Lone Pine

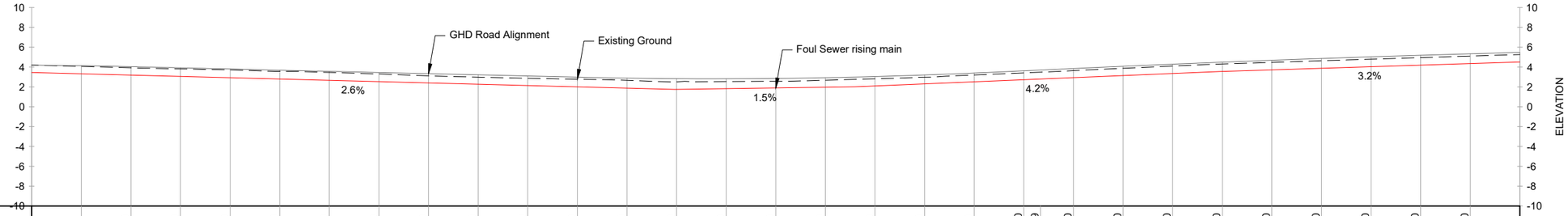

STATION (m)	GROUND LEVEL (m) (Existing)
5.00	4.06
10.00	3.92
15.00	3.81
20.00	3.71
25.00	3.57
30.00	3.46
35.00	3.30
40.00	3.12
45.00	2.98
50.00	2.87
55.00	2.77
60.00	2.67
65.00	2.51
70.00	2.54
75.00	2.56
80.00	2.67
85.00	2.82
90.00	2.98
95.00	3.20
100.00	3.41
101.69	3.48
105.00	3.63
110.00	3.88
115.00	4.10
120.00	4.31
125.00	4.47
130.00	4.63
135.00	4.79
140.00	4.95
145.00	5.11

PIPE COVER (m): 750mm Minimum Cover

PIPE TYPE: 40OD PE100 HDPE PN16

STATION 0 - 150

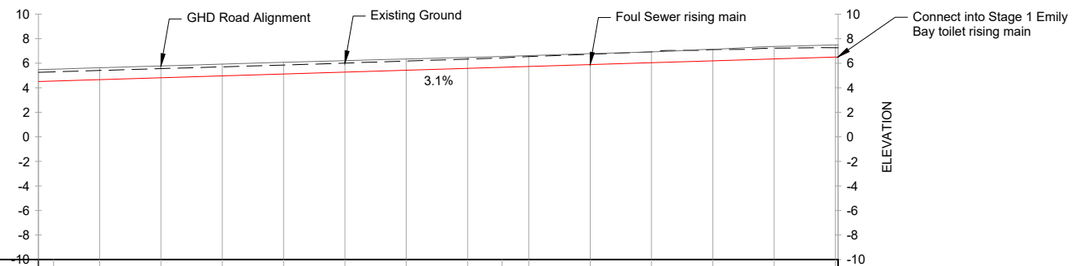

STATION (m)	GROUND LEVEL (m) (Existing)
150.00	5.26
151.24	5.30
155.00	5.41
160.00	5.56
165.00	5.70
170.00	5.85
175.00	6.01
180.00	6.18
185.00	6.34
187.82	6.44
190.00	6.54
195.00	6.73
200.00	6.93
205.00	7.11
210.00	7.23
215.00	7.26

PIPE COVER (m): 750mm Minimum Cover

PIPE TYPE: 40OD PE100 HDPE PN16

STATION 150 - 215

LONGSECTIONS

1:250 at A1
1:500 at A3

Revision		Des	Drn	Rvd	App	Date
B	For Detailed Design	ACS	ESG	ACS	ACS	19/10/23
A	For Detailed Design	ACS	ESG	ACS	ACS	24/08/23

Verify all dimensions on site before commencing work. Prioritise figured dimensions over scaling. Refer all discrepancies to the drawing office.
This document and the copyright in this document remain the property of Fluent Infrastructure Solutions Ltd. The contents of this document may not be reproduced either in whole or in part by any means whatsoever without the prior written consent of Fluent Infrastructure Solutions Ltd.

Fluent SOLUTIONS
www.fluentsolutions.co.nz

Client: Australian Government, Department of Infrastructure, Transport, Regional Development and Communications

Project Title: Norfolk Island
KAVHA Wastewater Scheme

Sheet Title: Stage 3
Lone Pine
Longsections

Scale (A1 Original): 1:500 m
Issue: For Detailed Design

Project No	Sheet	Revision
000770	C402	B

File: Z:\2_Jobs\000761 - 000770\000770 - Norfolk Island WW-STG 2&3\6_Drawings\04_Production\Stage 3\PRO_000770_Stage 3_Lone Pine

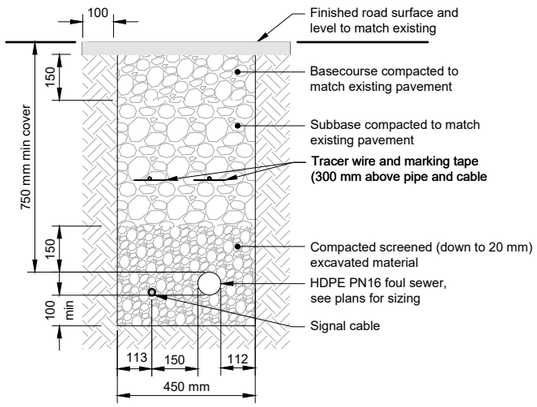

TRAFFICABLE (SEALED ROADS)

TYPICAL TRENCH DETAIL

1:10 at A1
1:20 at A3

NOTES:

D = External Diameter of Pipe

Trench to be Reinstated to Match Existing Levels

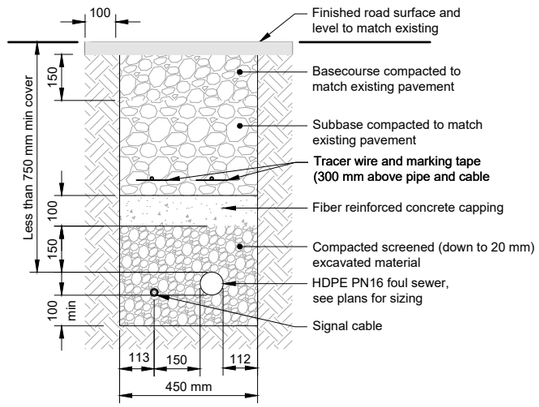

TRAFFICABLE (SEALED ROADS) - COVER LESS THAN 750MM

TYPICAL TRENCH DETAIL

1:10 at A1
1:20 at A3

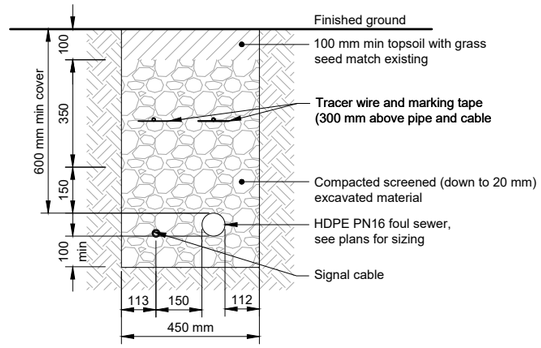

NON-TRAFFICABLE

TYPICAL TRENCH DETAIL

1:10 at A1
1:20 at A3

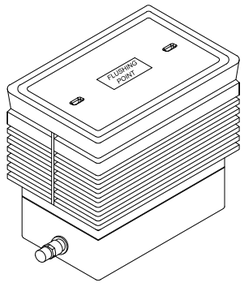

NOTES:	
1	COMPOSITE 'CLASS B' COVER TO SUIT (AS3996)
2	POLYETHYLENE PIT
3	POLYETHYLENE MALE CAMLOCK
4	POLYETHYLENE FEMALE CAMLOCK DUST CAP
5	GR316 S/S BALL VALVE, FULL BORE, LOCKABLE EYELET
6	GR 316 S/S TRACER WIRE (BY OTHERS)
7	GR316 S/S PIPE SUPPORT BRACKET
8	GR316 S/S PIPEWORK
9	POLYETHYLENE TRANSITION COUPLER (CONNECTION BY CIVIL CONTRACTOR)
10	GR316 S/S CHAIN
11	RUBBER UNISEAL
12	FITTINGS & MATERIALS TO BE IN ACCORDANCE WITH AUSTRALIAN STANDARDS

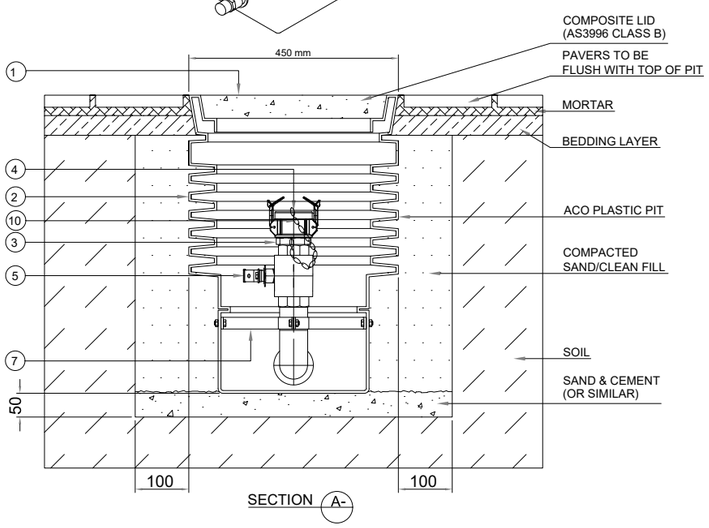

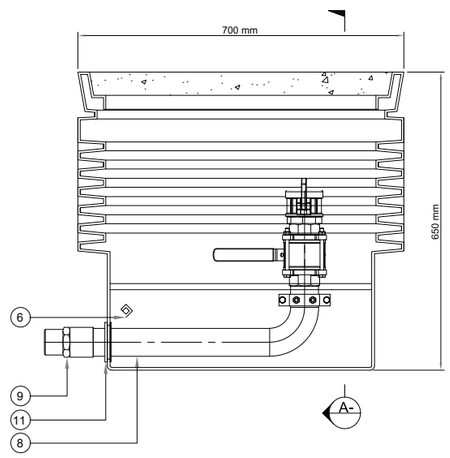

AQUATEC FLUSHING POINT

NTS

NOTES:	
1	POLYETHYLENE ONE PIECE PIT WITH COVER, CLASS A
2	GR316 S/S BALL VALVE, FULL BORE
3	GR316 S/S PUMP OUT TEE
4	GR316 S/S PLUG
5	GR316 S/S SWING CHECK VALVE, FULL BORE
6	PE MALE THREAD ADAPTER
7	GR316 S/S BOLT

NOTE:
- FITTINGS 2 to 5 IS A ONE PIECE ASSEMBLY
- ITEM 6 ALSO AVAILABLE IN BRASS AND 316 S/S

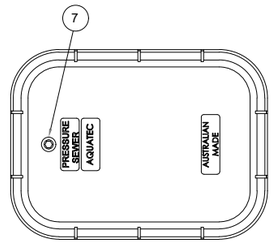

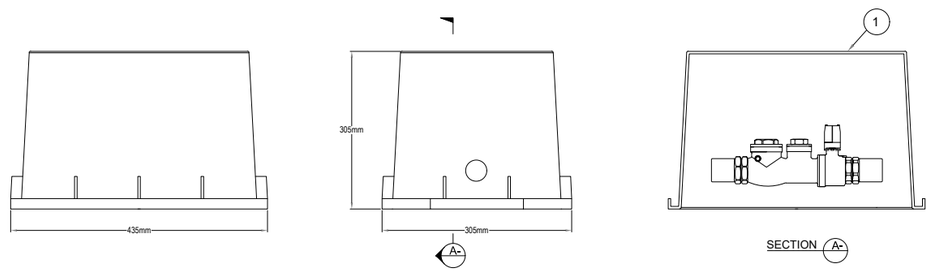

AQUATEC BOUNDARY CONNECTION KIT

NTS

Revision		Des	Drn	Rvd	App	Date
B	For Detailed Design	ACS	ESG	ACS	ACS	19/10/23
A	For Detailed Design	ACS	ESG	ACS	ACS	24/08/23

Verify all dimensions on site before commencing work. Prioritise figured dimensions over scaling. Refer all discrepancies to the drawing office.

This document and the copyright in this document remain the property of Fluent Infrastructure Solutions Ltd. The contents of this document may not be reproduced either in whole or in part by any means whatsoever without the prior written consent of Fluent Infrastructure Solutions Ltd.

Fluent SOLUTIONS
www.fluentsolutions.co.nz

Client: Australian Government, Department of Infrastructure, Transport, Regional Development and Communications

Project Title: Norfolk Island
KAVHA Wastewater Scheme

Sheet Title: Typical Details
1 of 3

Scale (A1 Original): As Shown
Issue: For Detailed Design

Project No	Sheet	Revision
000770	C501	B

File: Z:\2_Jobs\000761 - 000770\000770 - Norfolk Island WW-STG 2&3\6_Drawings\04_Production\Details\PRO_Norfolk_Stage 3 Details

0 10 20 30 40 50 mm 75 mm 100 mm

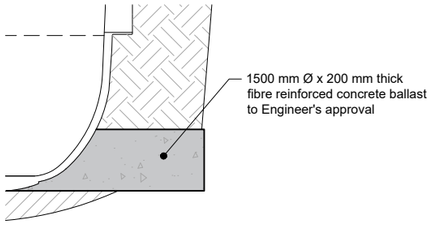

DETAIL 2 -
1:10 at A1
1:20 at A3

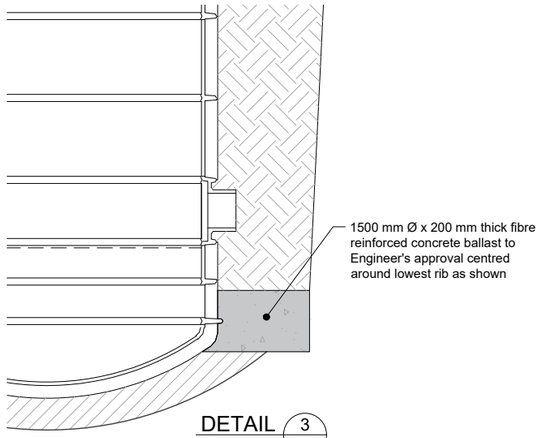

DETAIL 3 -
1:10 at A1
1:20 at A3

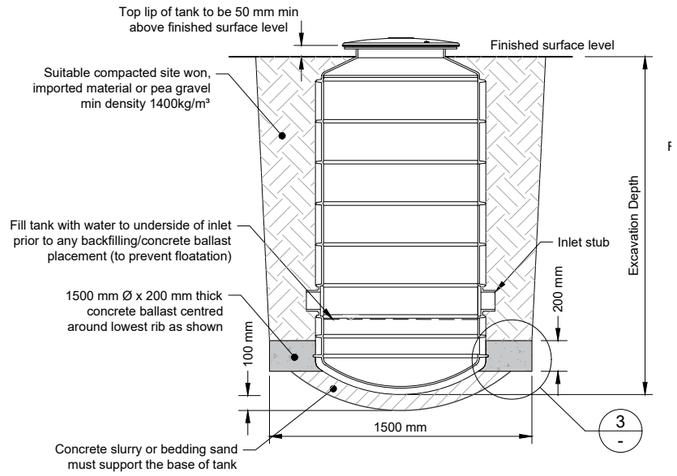

Aquatec Pressure Sewer Pump Unit
Simplex OGT 1500L

NTS

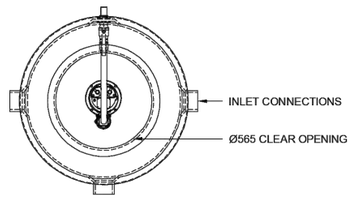

PLAN VIEW - LID REMOVED

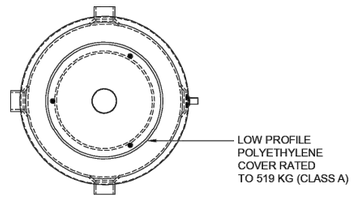

PLAN VIEW

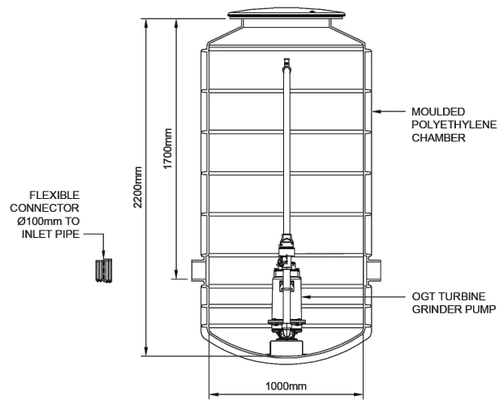

SECTIONAL SIDE ELEVATION

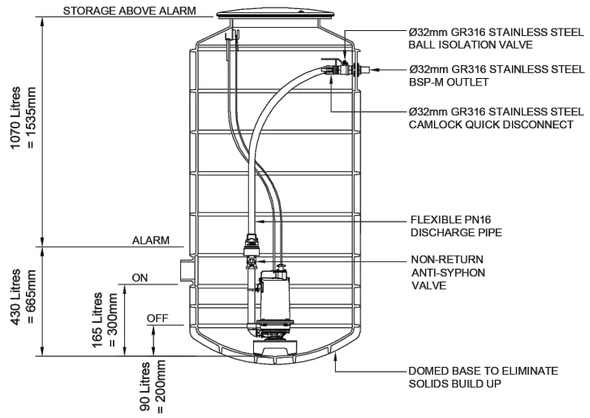

SECTIONAL ELEVATION

Aquatec Pressure Sewer Pump Unit
Simplex OGT 1500L

NTS

NOTE:
1. Refer to Aquatec specifications and drawings for full details.

Revision		Des	Drn	Rvd	App	Date
B	For Detailed Design	ACS	ESG	ACS	ACS	19/10/23
A	For Detailed Design	ACS	ESG	ACS	ACS	24/08/23

Verify all dimensions on site before commencing work. Prioritise figured dimensions over scaling. Refer all discrepancies to the drawing office.
This document and the copyright in this document remain the property of Fluent Infrastructure Solutions Ltd. The contents of this document may not be reproduced either in whole or in part by any means whatsoever without the prior written consent of Fluent Infrastructure Solutions Ltd.

Fluent SOLUTIONS
www.fluentsolutions.co.nz

Client: Australian Government, Department of Infrastructure, Transport, Regional Development and Communications

Project Title: Norfolk Island
KAVHA Wastewater Scheme

Sheet Title: Typical Details
2 of 3

Scale (A1 Original): As Shown
Issue: For Detailed Design

Project No	Sheet	Revision
000770	C502	B

File: Z:\2_Jobs\000761 - 000770\000770 - Norfolk Island WW-STG 2&3\6_Drawings\04_Production\Details\PRO_Norfolk_Stage 3 Details

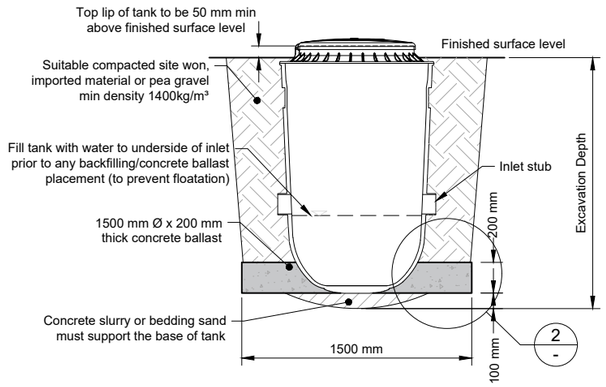

Aquatec Pressure Sewer Pump Unit
Enduraplex OGT 950L

NTS

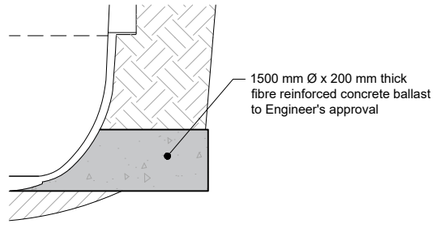

DETAIL 2 -
1:10 at A1
1:20 at A3

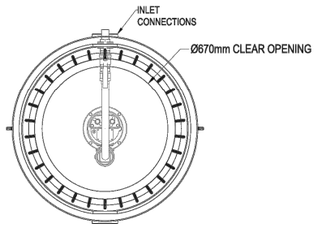

PLAN VIEW (LID REMOVED)

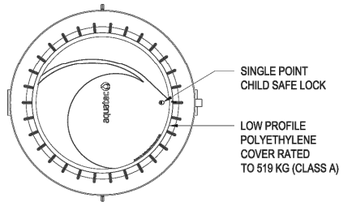

PLAN VIEW

NOTE:
1. Refer to Aquatec specifications and drawings for full details.

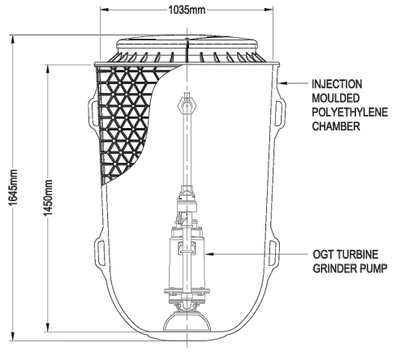

SECTIONAL SIDE ELEVATION

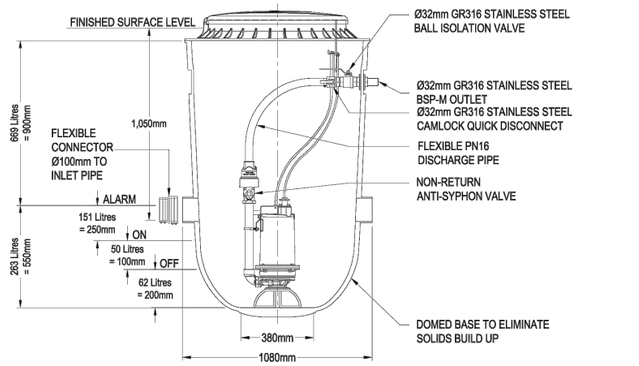

SECTIONAL ELEVATION

***ALL LEVELS ARE RECOMMENDED FACTORY SETPOINTS WHICH CAN BE ADJUSTED TO SUIT SPECIFIC REQUIREMENTS

Aquatec Pressure Sewer Pump Unit
Enduraplex OGT 950L

NTS

Revision		Des	Drn	Rvd	App	Date
A	Detailed Design	ACS	ESG	ACS	ACS	19/10/23

Verify all dimensions on site before commencing work. Prioritise figured dimensions over scaling. Refer all discrepancies to the drawing office. This document and the copyright in this document remain the property of Fluent Infrastructure Solutions Ltd. The contents of this document may not be reproduced either in whole or in part by any means whatsoever without the prior written consent of Fluent Infrastructure Solutions Ltd.

Fluent SOLUTIONS
www.fluentsolutions.co.nz

Client: Australian Government, Department of Infrastructure, Transport, Regional Development and Communications

Project Title: Norfolk Island
KAVHA Wastewater Scheme

Sheet Title: Typical Details
3 of 3

Scale (A1 Original): As Shown
Issue: For Detailed Design

Project No	Sheet	Revision
000770	C503	A

File: Z:\2_Jobs\000761 - 000770\000770 - Norfolk Island WW-STG 2&3\6_Drawings\04_Production\Details\PRO_Norfolk_Stage 3 Details

0 10 20 30 40 50 mm 75 mm 100 mm

ISLAND PLUMBING & GAS
NORFOLK ISLAND MAIN SPS
SEWAGE PUMP STATION

DRAWING LIST

DRAWING NUMBER	REV DATE	REV	DESCRIPTION
19855-10000	19/12/23	1	TITLE & INDEX
19855-40301	19/12/23	1	HYDRAULIC SCHEMATIC DIAGRAM (SPS 3)
19855-10302	19/12/23	1	SPS - PLAN (SPS 3)
19855-10303	19/12/23	1	SPS - SECTION (SPS 3)
19855-10305	19/12/23	1	SPS - BILL OF MATERIALS (SPS 3)
19855-20301	19/12/23	1	SPS - BACKFILL DETAIL & NOTES (SPS 3)
19855-10306	19/12/23	1	ESV - PLAN & SECTION (SPS 3)
19855-20302	19/12/23	1	ESV - BACKFILL DETAIL & NOTES (SPS 3)
19855-10307	19/12/23	1	ESV - BILL OF MATERIALS (SPS 3)
19855-40401	19/12/23	1	HYDRAULIC SCHEMATIC DIAGRAM (SPS 4)
19855-10402	19/12/23	1	SPS - PLAN (SPS 4)
19855-10403	19/12/23	1	SPS - SECTION (SPS 4)
19855-10405	19/12/23	1	SPS - BILL OF MATERIALS (SPS 4)
19855-20401	19/12/23	1	SPS - BACKFILL DETAIL & NOTES (SPS 4)
19855-40501	19/12/23	1	HYDRAULIC SCHEMATIC DIAGRAM (SPS 5)
19855-10502	19/12/23	1	SPS - PLAN (SPS 5)
19855-10503	19/12/23	1	SPS - SECTION (SPS 5)
19855-10505	19/12/23	1	SPS - BILL OF MATERIALS (SPS 5)
19855-20501	19/12/23	1	SPS - BACKFILL DETAIL & NOTES (SPS 5)
19855-40601	19/12/23	1	HYDRAULIC SCHEMATIC DIAGRAM (SPS 6)
19855-10602	19/12/23	1	SPS - PLAN (SPS 6)
19855-10603	19/12/23	1	SPS - SECTION (SPS 6)
19855-10605	19/12/23	1	SPS - BILL OF MATERIALS (SPS 6)
19855-20601	19/12/23	1	SPS - BACKFILL DETAIL & NOTES (SPS 6)

REV	REVISION DETAILS	DRN	CKD	APP	DATE	REF. NUMBER	REFERENCE DOCUMENT
1	ISSUED FOR CONSTRUCTION	CV	NP		19/12/23		

Aquatec Fluid Systems Pty Ltd
www.aquatecenviro.com
ABN - 94 114 944 026
2 Provincial Crescent, Shepparton VIC 3630
T 1300 088 555 / E info@aquatecenviro.com

© Copyright - This drawing and design must not be copied in whole or in part without the written consent of Aquatec Environmental Group Pty Ltd.

Any literary or artistic works contained in this document are copyright Aquatec Environmental Group Pty Ltd ACN 112 325 434 (Aquatec Fluid Systems). Any information in this document, except information also available in publically available sources, is confidential to Aquatec. Reproduction of this document or part of it, or disclosure of the information contained in it, is not permitted without the written consent of Aquatec.

AQUATEC

Drawn	RS
Checked	JS
Approved	
Scale	AS SHOWN

This Drawing must not be used for Construction unless signed as Approved

Original Size A1

Client: ISLAND PLUMBING & GAS
Project: NORFOLK ISLAND MAIN SPS
JOB: SEWER PUMP STATION
Title: TITLE & INDEX

OP19855	ISSUED FOR CONSTRUCTION (IFC01)	19855 - 10000	1
Project Number	Customer Submission Status	Drawing Number	Revision

Plot Date: 19/12/2023 Plotted by: Conrado Viray Cad File No: C:\Users\cviray\Documents\OP19855 Norfolk Island\Wip\OP19855 NORFOLK ISLAND SPS IFC01.dwg

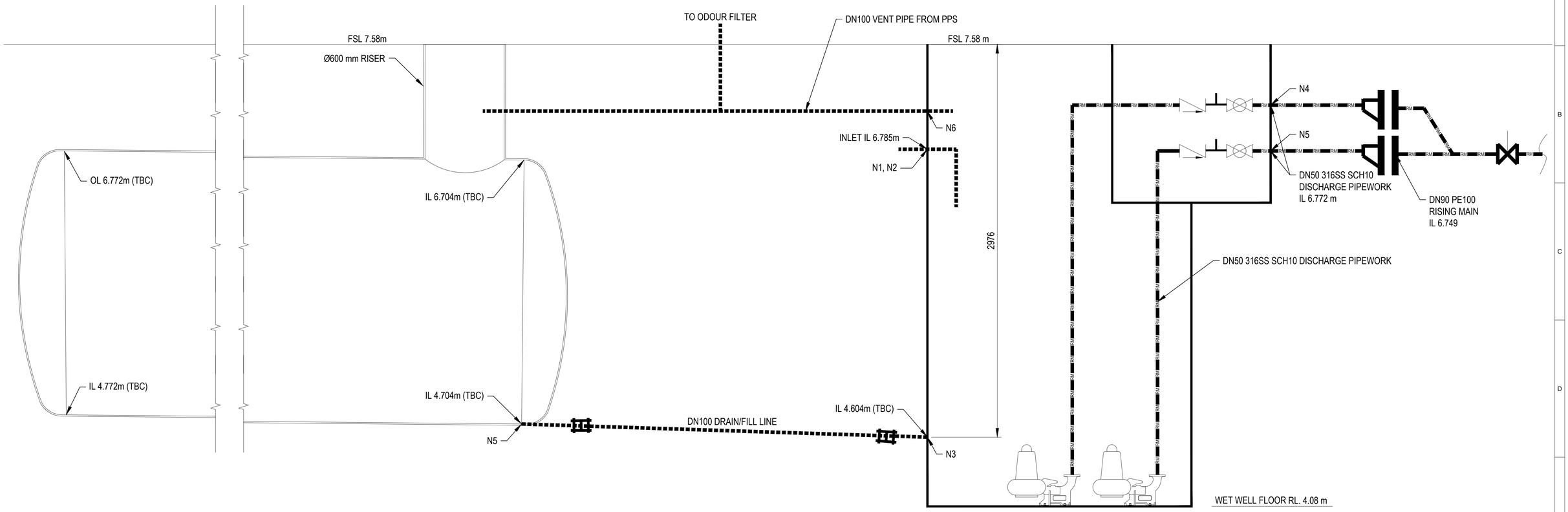

HYDRAULIC SCHEMATIC DIAGRAM

SCALE: NTS

CIVIL CONTRACTOR SCOPE OF WORKS | AQUATEC SCOPE OF WORKS

REV	REVISION DETAILS	DRN	CKD	APP	DATE	REF. NUMBER	REFERENCE DOCUMENT
1	ISSUED FOR CONSTRUCTION	CV	NP		19/12/23		

Aquatec Fluid Systems Pty Ltd
www.aquatecenviro.com
ABN - 94 114 944 026
2 Provincial Crescent, Shepparton VIC 3630
T 1300 088 555 / E info@aquatecenviro.com

© ***Copyright*** - This drawing and design must not be copied in whole or in part without the written consent of Aquatec Environmental Group Pty Ltd.

Any literary or artistic works contained in this document are copyright Aquatec Environmental Group Pty Ltd ACN 112 325 434 (Aquatec Fluid Systems). Any information in this document, except information also available in publically available sources, is confidential to Aquatec. Reproduction of this document or part of it, or disclosure of the information contained in it, is not permitted without the written consent of Aquatec.

AQUATEC

Drawn	RS
Checked	JS
Approved	
Scale	AS SHOWN
This Drawing must not be used for Construction unless signed as Approved	Original Size A1

Client	ISLAND PLUMBING & GAS
Project	NORFOLK ISLAND MAIN SPS
JOB	SEWER PUMP STATION
Title	HYDRAULIC SCHEMATIC DIAGRAM (SPS 3)

OP19855	ISSUED FOR CONSTRUCTION (IFC01)	19855 - 40301	1
Project Number	Customer Submission Status	Drawing Number	Revision

Plot Date: 19/12/2023 Plotted by: Conrado Viray Cad File No: C:\Users\cviray\Documents\OP19855 Norfolk Island\Wip\OP19855 NORFOLK ISLAND SPS IFC01.dwg

NON-TRAFFICABLE INSTALLATION

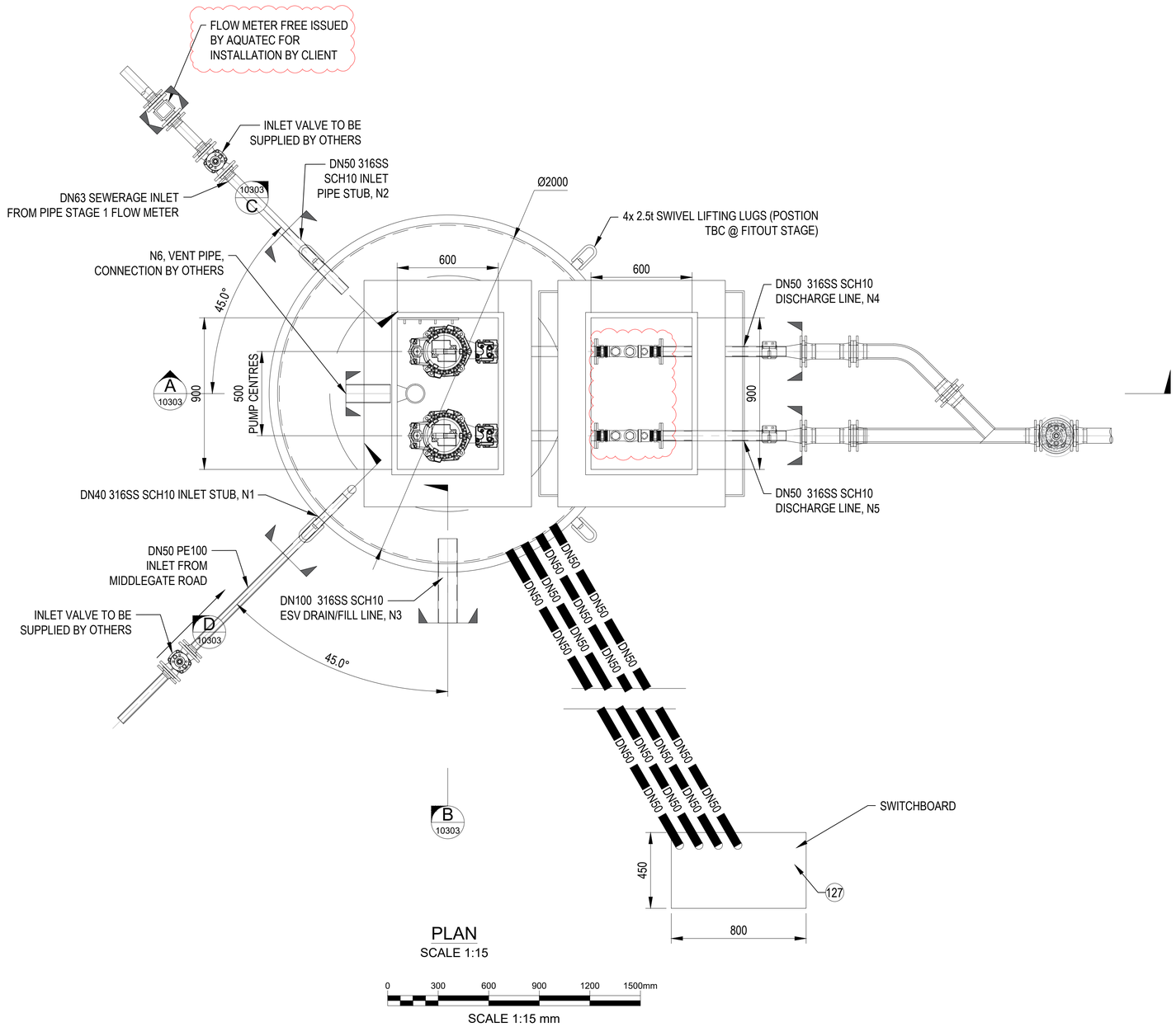

PLAN
SCALE 1:15

0 300 600 900 1200 1500mm
SCALE 1:15 mm

GENERAL NOTES:

1. PUMP STATION TO BE AQUATEC MODEL: AFPS20/3500IV/OP19855
2. ALL FRP PENETRATIONS TO EB GLASSED INTO THE FRP VESSEL.
3. REINFORCEMENT TO COMPLY WITH AS4671.
4. ALL HOLES TO BE PRE CORED AND GLASSED.
5. ALL FLANGES TO BE DRILLED TO AS4087 PN16 UNO (FLANGE DRILLING TO BE SAME AS TABLE D FLANGE)
6. FRP PIPE PENETRATION & 316SS FIXINGS TO THE FRP WALL TO BE PERFORMED IN ACCORDANCE WITH AS2634
7. ELECTRICAL SWITCHBOARD DOORS TO HAVE MIN. 600mm CLEARANCE TO ANY SURROUNDING ABOVE GROUND STRUCTURE AS PER AS3000

PUMPING STATION DETAILS	
FINISHED SURFACE LEVEL RL	7.58 m
DISCHARGE PIPE IL (@ VC)	6.772 m
SEWER INLET PIPE DIAMETER	DN 50
SEWER INLET PIPE IL	6.785 m
WET WELL FLOOR RL	4.08 m

PUMP DETAILS	
PUMP MAKE	XYLEM
PUMP MODEL	FLYGT MP3127
PUMP WEIGHT	110 KG
MOTOR SIZE	10.9 kW
IMPELLER TYPE / SIZE	222 mm
IMPELLER MATERIAL	GREY CAST IRON
PUMP OPERATION	DUTY / STAND-BY
PUMP CONTROL	VSD

CIVIL CONTRACTOR SCOPE OF WORKS | AQUATEC SCOPE OF WORKS

REV	REVISION DETAILS	DRN	CKD	APP	DATE	REF. NUMBER	REFERENCE DOCUMENT
1	ISSUED FOR CONSTRUCTION	CV	NP		19/12/23		

Aquatec Fluid Systems Pty Ltd
www.aquatecenviro.com
ABN - 94 114 944 026
2 Provincial Crescent, Shepparton VIC 3630
T 1300 088 555 / E info@aquatecenviro.com

Copyright - This drawing and design must not be copied in whole or in part without the written consent of Aquatec Environmental Group Pty Ltd.

Any literary or artistic works contained in this document are copyright Aquatec Environmental Group Pty Ltd ACN 112 325 434 (Aquatec Fluid Systems). Any information in this document, except information also available in publically available sources, is confidential to Aquatec. Reproduction of this document or part of it, or disclosure of the information contained in it, is not permitted without the written consent of Aquatec.

AQUATEC

Drawn	RS
Checked	JS
Approved	
Scale	AS SHOWN

This Drawing must not be used for Construction unless signed as Approved

Original Size A1

Client: ISLAND PLUMBING & GAS
Project: NORFOLK ISLAND MAIN SPS
JOB: SEWER PUMP STATION
Title: SPS - PLAN (SPS 3)

OP19855	ISSUED FOR CONSTRUCTION (IFC01)	19855 - 10302	1
Project Number	Customer Submission Status	Drawing Number	Revision

Plot Date: 19/12/2023 Plotted by: Conrado Viray Cad File No: C:\Users\cviray\Documents\OP19855 Norfolk Island\Wip\OP19855 NORFOLK ISLAND SPS IFC01.dwg

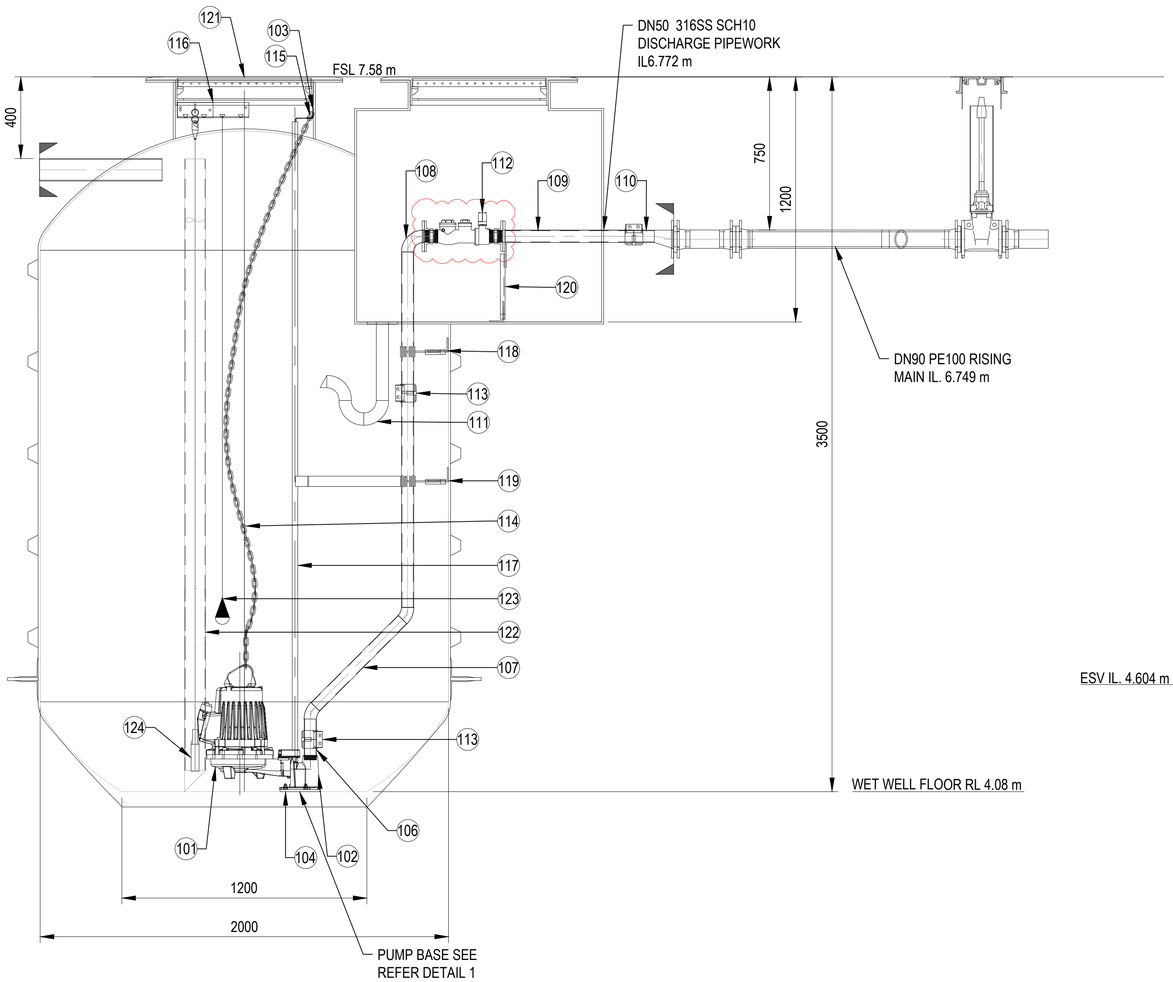

SECTION A
SCALE 1:15 10302

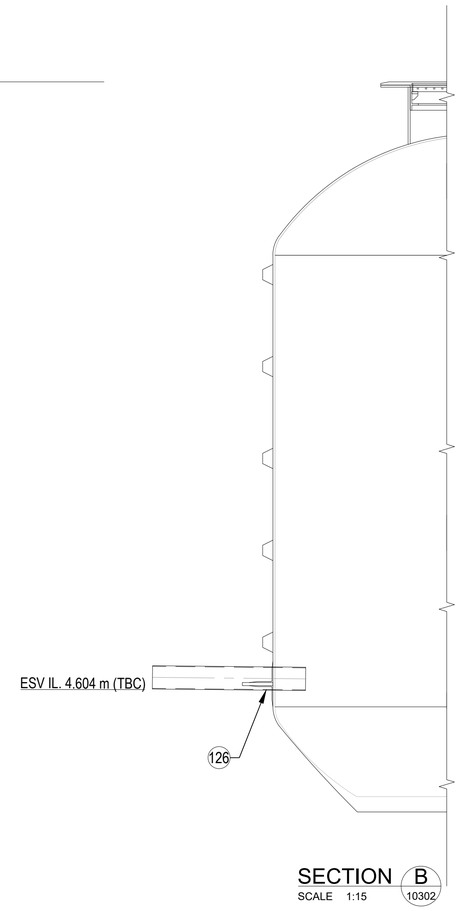

SECTION B
SCALE 1:15 10302

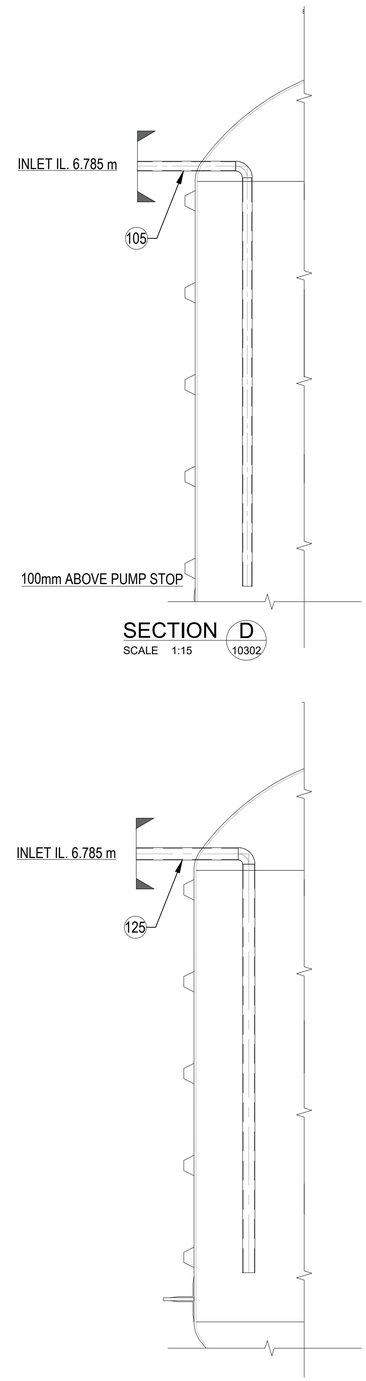

SECTION D
SCALE 1:15 10302

SECTION C
SCALE 1:15 10302

0 300 600 900 1200 1500mm
SCALE 1:15 mm

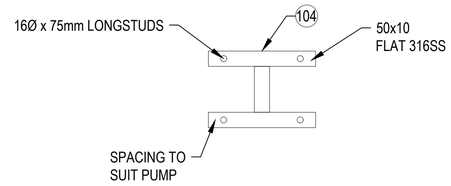

DETAIL 1
SCALE 1:10 10303

0 200 400 600 800 1000mm
SCALE 1:10 mm

CIVIL CONTRACTOR SCOPE OF WORKS | AQUATEC SCOPE OF WORKS

REV	REVISION DETAILS	DRN	CKD	APP	DATE	REF. NUMBER	REFERENCE DOCUMENT
1	ISSUED FOR CONSTRUCTION	CV	NP		19/12/23		

Aquatec Fluid Systems Pty Ltd
www.aquatecenviro.com
ABN - 94 114 944 026
2 Provincial Crescent, Shepparton VIC 3630
T 1300 088 555 / E info@aquatecenviro.com

© Copyright - This drawing and design must not be copied in whole or in part without the written consent of Aquatec Environmental Group Pty Ltd.

Any literary or artistic works contained in this document are copyright Aquatec Environmental Group Pty Ltd ACN 112 325 434 (Aquatec Fluid Systems). Any information in this document, except information also available in publically available sources, is confidential to Aquatec. Reproduction of this document or part of it, or disclosure of the information contained in it, is not permitted without the written consent of Aquatec.

AQUATEC

Drawn	RS
Checked	JS
Approved	
Scale	AS SHOWN
This Drawing must not be used for Construction unless signed as Approved	Original Size A1

Client: ISLAND PLUMBING & GAS
Project: NORFOLK ISLAND MAIN SPS
JOB: SEWER PUMP STATION
Title: SPS - SECTION (SPS 3)

OP19855	ISSUED FOR CONSTRUCTION (IFC01)	19855 - 10303	1
Project Number	Customer Submission Status	Drawing Number	Revision

Plot Date: 19/12/2023 Plotted by: Conrado Viray Cad File No: C:\Users\cviray\Documents\OP19855 Norfolk Island\Wip\OP19855 NORFOLK ISLAND SPS IFC01.dwg

SPS - BILL OF MATERIALS

MATERIAL SCHEDULE

ITEM NUMBER	DESCRIPTION	QUANTITY	MATERIAL	REMARKS
101	SUBMERSIBLE PUMP	2	CAST IRON	REFER PUMP DETAILS IN DRAWING 10302
102	PUMP PEDESTAL, DN50	2	CAST IRON	XYLEM, BSP CONNECTION
103	UPPER GUIDE RAIL BRACKETS	2	CAST IRON	XYLEM
104	PUMP BASE	2	316SS	
105	DN40 INLET PIPE ASSEMBLY: 1 QTY X DN40 90 DEG BEND 2 QTY X DN40 STRAIGHT PIPE	1	316SS SCH 10	
106	DN50 BSP-SP PIPEWORK	2	316 SS SCH 10	LENGTH TO SUIT
107	DN50 SP-SP PIPEWORK, COMPRISING OF: 2 QTY X DN50 45 DEG BEND 3 QTY X DN50 STRAIGHT PIPE	2	316SS SCH 10	LENGTH TO SUIT
108	DN50 SP-FL PIPEWORK, COMPRISING OF: 1 QTY X DN50 90 DEG BEND 1 QTY X DN50 STRAIGHT PIPE 1 QTY X DN50 FLANGE	2	316SS SCH 10	LENGTH TO SUIT
109	DN50 FL-SP PIPEWORK, COMPRISING OF: 1 QTY X DN50 FLANGE 1 QTY X STRAIGHT PIPE	5	316SS SCH 10	
110	DN80-DN50 FL-SP PIPEWORK, COMPRISING OF: 1 QTY X DN50 FLANGE 1 QTY X STRAIGHT PIPE 1 QTY X ECCENTRIC REDUCER	2	316 SS SCH 10	
111	DN50 DRAIN, COMPRISING OF: 1 QTY x FROG FLAP VALVE 4 QTY x 90 DEG. M/F ELBOWS 1 QTY x PIPE	2	PVC SN8 MIN.	
112	DN50 BOUNDARY KIT ASSEMBLY, COMPRISING OF 1 QTY X BOUNDARY KIT 2 QTY X HEX NIPPLE 2 QTY X BSP FLANGE AS4087	2	316SS	
113	DN50 GRIP-E COUPLING	6	STAINLESS STEEL	NORMA
114	6mm PUMP CHAINS, GR60, LOAD RATED 1 m SPACING W MASTER LINK EITHER ENDS & BOW SHACKLE	2	316SS	
115	CHAIN HOOKS	2	316SS	AQT PN 504501
116	FLOAT HOOK	1	316SS	AQT PN 627534
117	PUMP GUIDERAILS, 2"	2	316SS SCH 10	LENGTH TO SUIT
118	DN50 PIPE SUPPORT CLAMP TYPE TWIN LEG PIPE SUPPORT BRACKETS	2	316SS	REFER AQUATEC STD DWG AQSTD-00001 DETAIL 01
119	DN50 PIPE SUPPORT CLAMP TYPE TWIN LEG PIPE SUPPORT BRACKETS WITH ANTISPREAD GUIDERAIL BRACKET	2	316SS	REFER AQUATEC STD DWG AQSTD-00001 DETAIL 02
120	DN50 PIPE SUPPORT TWIN LEG PIPE SUPPORT BRACKETS	2	316SS	REFER AQUATEC STD DWG AQSTD-00001 DETAIL 04
121	1-PART ACCESS COVER WITH THE FOLLOWING 3 SIDED PROTECTION CLEAR OPENING 900X600 FLUSH MOUNTED WITH LOW PROFILE HINGES RUBBER SEAL UNDER LIDS , GAS TIGHT CONCEALED LOCK BOXES WITH STD KEY ENTRY REMOVABLE HINGED SAFETY GRATES & EASY LIFT HANDLES	1	ALUMINIUM	AUSTRAL TSP1068
122	STILLING TUBE, ABS, DN100, c/w BRACKETS	1	ABS	LENGTH TO SUIT,
123	FLOAT, LEVEL CONTROL	1	EPDM RUBBER	
124	LEVEL TRANSDUCER	1	-	AQUATEC
125	DN50 INLET PIPE ASSEMBLY: 1 QTY X DN50 90 DEG BEND 2 QTY X DN50 STRAIGHT PIPE	1	316 SS SCH 10	LENGTH TO SUIT
126	DN100 SP-SP PIPEWORK	1	316 SS SCH 10	LENGTH TO SUIT
127	SWITCHBOARD	1	ALUMINIUM	REFER ELECTRICAL DRAWING SET.

REV	REVISION DETAILS	DRN	CKD	APP	DATE	REF. NUMBER	REFERENCE DOCUMENT
1	ISSUED FOR CONSTRUCTION	CV	NP		19/12/23		

Aquatec Fluid Systems Pty Ltd
www.aquatecenviro.com
ABN - 94 114 944 026
2 Provincial Crescent, Shepparton VIC 3630
T 1300 088 555 / E info@aquatecenviro.com

© Copyright - This drawing and design must not be copied in whole or in part without the written consent of Aquatec Environmental Group Pty Ltd.

Any literary or artistic works contained in this document are copyright Aquatec Environmental Group Pty Ltd ACN 112 325 434 (Aquatec Fluid Systems). Any information in this document, except information also available in publically available sources, is confidential to Aquatec. Reproduction of this document or part of it, or disclosure of the information contained in it, is not permitted without the written consent of Aquatec.

AQUATEC

Drawn	RS
Checked	JS
Approved	
Scale	AS SHOWN

This Drawing must not be used for Construction unless signed as Approved

Original Size A1

Client: ISLAND PLUMBING & GAS
Project: NORFOLK ISLAND MAIN SPS
JOB: SEWER PUMP STATION
Title: SPS - BILL OF MATERIALS (SPS 3)

OP19855	ISSUED FOR CONSTRUCTION (IFC01)	19855 - 10305	1
Project Number	Customer Submission Status	Drawing Number	Revision

Plot Date: 19/12/2023 Plotted by: Conrado Viray Cad File No: C:\Users\cviray\Documents\OP19855 Norfolk Island\Wip\OP19855 NORFOLK ISLAND SPS IFC01.dwg

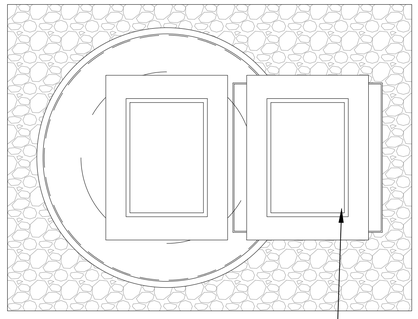

MIN. ALLOWABLE SOIL BEARING CAPACITY UNDERSIDE OF THE REINFORCED CONCRETE SLABS TO BE 100kPA OR AS PER ENGINEER'S REQUIREMENT

FOUNDATION SHALL BE INSPECTED BY AN EXPERIENCED GEO-TECHNICAL ENGINEER TO CONFIRM MINIMUM BEARING REQUIRED AND THERE IS NO RISK OF SETTLEMENT

SPS BACKFILL- PLAN

SCALE 1:25

0 500 1000 1500 2000 2500mm

SCALE 1:25 mm

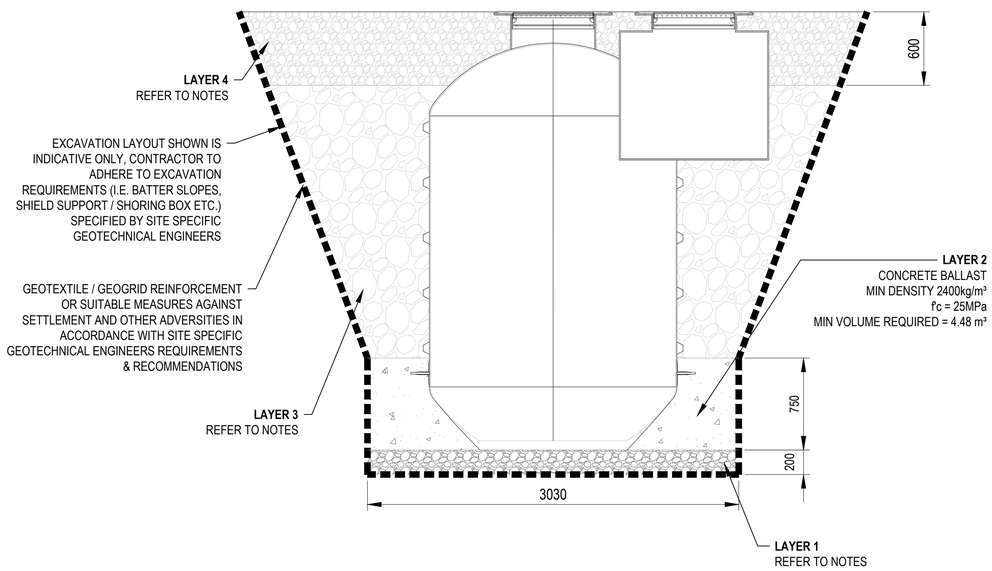

SECTION A

SCALE 1:25 20301

0 500 1000 1500 2000 2500mm

SCALE 1:25 mm

NOTE:
THE BALLAST CONCRETE HEIGHT NEED TO BE MIN. 150mm HIGH ABOE LOWEST RIB (BUOYANCY ANCHOR RIB)

CONSTRUCTION NOTES AND BACKFILLING REQUIREMENTS FOR PUMP STATION INSTALLATION (GRAVITY SEWER / RISING MAIN TRENCH FILLING, PIPE EMBEDMENT AND ANY OTHER BACKFILL / BULK EARTHWORKS OUTSIDE THE PUMP STATION INSTALLATION TO BE DESIGNED & CONSTRUCTED BY CIVIL CONTRACTORS)

OCCUPATIONAL HEALTH AND SAFETY:
THE CONTRACTOR IS RESPONSIBLE TO BE KNOWLEDGEABLE OF AND IS BOUND BY THE OH&S STATUTORY REQUIREMENTS PERTAINING TO WORK IN DEEP TRENCHES AND SHAFTS.

THE WATER AUTHORITY:
THE SPECIFICATIONS OF THE RELEVANT PRINCIPLE WATER AUTHORITY FOR THE INSTALLATION AND CONSTRUCTION OF PUMP STATION ARE TO BE ADHERED TO IN ADDITION TO THESE CONSTRUCTION RECOMMENDATIONS.

SITE INVESTIGATION:
CONTRACTORS TO LIAISE WITH THEIR GEOTECHNICAL/CONSULTING ENGINEER TO CONDUCT A SITE/GEOTECHNICAL INVESTIGATION TO ESTABLISH INDICATIVE SUBSURFACE CONDITIONS PRIOR TO THE COMMENCEMENT OF CONSTRUCTION.

BACKFILL DESIGN ASSUMPTIONS & NOTES:
1. BACKFILL DETAILED ON THIS DRAWING ARE BASED ON NORMAL SITE CONDITION.
2. GROUNDWATER LEVEL IS ASSUMED AT FSL FOR STRUCTURAL DESIGN & BUOYANCY / FLOATATION STABILITY CALCULATIONS.

LAYER 1 - FOUNDATION:
FOUNDATION MATERIAL - 20mm CLASS 2 CRUSHED ROCK (NATURAL GRAVEL OR QUARRIED MATERIALS). COMPACTION OF 98% MAXIMUM DRY DENSITY (STD) IN ACCORDANCE WITH AS1289.5.1.
ALTERNATIVELY, GRADE N20 MASS CONCRETE MAY BE CAST AS A SUB BASE WITH 50MM LAYER OF COMPACTED DRAINAGE AGGREGATE BEDDING TO ACHIEVE THE FINISHED PREPARED BASE LEVEL

1. EXCAVATION DEPTH IS TO BE A MINIMUM OF 200MM BELOW BASE OF CASTING AND MAY BE DEEPER AS REQUIRED (OR POURING ADDITIONAL BLINDING) TO ACHIEVE A MINIMUM FOUNDATION BEARING CAPACITY OF 100KPA, FOUNDATION SHALL BE INSPECTED BY AN EXPERIENCED GEO-TECHNICAL ENGINEER TO CONFIRM MINIMUM BEARING REQUIRED AND THERE IS NO RISK OF SETTLEMENT, **(HOLD POINT);**
2. WHERE OVER EXCAVATION HAS OCCURRED BELOW THE PITS, SUCH OVER EXCAVATION SHALL BE FILLED WITH ABOVE MENTIONED FOUNDATION MATERIAL TO THE ENGINEER'S SATISFACTION;
3. DO NOT SLUICE OR FLOOD THE BACKFILL INTO PLACE;
4. REMOVE OR STOCKPILE SPOIL AS REQUIRED;
5. BASE FOUNDATION SHALL BE INSPECTED BY AN EXPERIENCED GEO-TECHNICAL ENGINEER TO CONFIRM MINIMUM BEARING REQUIRED AND THERE IS NO RISK OF SETTLEMENT.

LAYER 2 - CONCRETE BALLAST
CONCRETE WITH MIN DENSITY = 2400kg/m³ AND MIN fc' = 25MPa
1. POUR CALCULATED VOLUME OF CONCRETE AS RETAINER BALLAST AROUND BASE OF UNIT TO RESIST BUOYANCY & MUST BE CONSTRUCTED TO THE DIMENSIONS SHOWN ON THE SECTION;
2. MIN 200MM CLEARANCE NEED TO BE PROVIDED BETWEEN PIPE / PIPE CONNECTIONS' EXTERNAL SURFACE AND CONCRETE BALLAST FOR THE PIPEWORK ENCROACHING CONCRETE BALLAST

LAYER 3 - BACKFILL:
BACKFILL MATERIAL - 20mm CLASS 4 CRUSHED ROCK (NATURAL GRAVEL OR QUARRIED MATERIALS).
1. COMPACTED TO MIN 95% RDD (STD) IN MAXIMUM LIFTS OF 200MM IN ACCORDANCE WITH AS1289.5.1. DO NOT SLUICE OR FLOOD THE BACKFILL INTO PLACE;
2. MIN DENSITY 1850 Kg/m3 (**HOLD POINT**);

LAYER 4 - BACKFILL:
BACKFILL MATERIAL - 20mm CLASS 2 CRUSHED ROCK (NATURAL GRAVEL OR QUARRIED MATERIALS).
1. COMPACTED TO MIN 98% MDD (STD) IN MAXIMUM LIFTS OF 200MM IN ACCORDANCE WITH AS1289.5.1. DO NOT SLUICE OR FLOOD THE BACKFILL INTO PLACE;
2. MIN DENSITY 1850 Kg/m3 (**HOLD POINT**);

MATERIAL SPECIFICATIONS:
NO BACKFILL PARTICLE SIZE GREATER 20MM AROUND OR SURROUNDING THE PITS IS ALLOWED. ALL CHOSEN MATERIALS SHALL BE IN ACCORDANCE WITH THE FOLLOWING, AS REQUIRED:
1. MRWA BACKFILL SPECIFICATION 04-03.2
2. VICROAD STANDARD 812
3. CONSULTING ENGINEERS SITE INVESTIGATION
4. WSAA PRODUCT SPECIFICATION & AS/NZS 2566.2

INTEGRAL VALVE CHAMBER INSTALLATION:
THE VALVE CHAMBER IS FULLY SELF SUPPORTING. TO SAFE GUARD AGAINST CAVITIES GETTING FORMED UNDERSIDE OF THE VALVE CHAMBER SEGMENT, BACK FILL AS FOLLOWS:
1. AFTER THE FINAL RING SECTION IS IN POSITION, PREPARE THE BACKFILL TO WITHIN 20MM OF THE TOP OUTER SEALING EDGE.
2. AQUATEC SITE REPRESENTATIVE ALONG WITH INSTALLATION CONTRACTOR TO CHECK AND ENSURE THAT THE BACKFILL IS SATISFACTORY.
3. LOWER THE VALVE CHAMBER INTO POSITION AND ENSURE AN EVEN SEAL UNDERNEATH RING SECTION

COVER SLAB INSTALLATION:
1. PREPARE THE COMPACTED GROUND TO THE TOP OF THE UPPERMOST WELL INCREMENT.
2. AQUATEC SITE REPRESENTATIVE ALONG WITH INSTALLATION CONTRACTOR TO CHECK AND CONFIRM THIS PRIOR TO LOWERING THE COVER SLAB INTO POSITION.
3. OVERHANG LOAD MUST BEAR ON BACKFILLED GROUND WHEN INSTALLING ONTO FINAL RING SEGMENT.

PERIMETER:
PLACE COMPACTED BACKFILL UP TO FINISHED NATURAL SURFACE LEVEL AROUND ITS PERIMETER.
MAINTAIN GOOD TRANSITION BETWEEN ORIGINAL SURFACES AND THE NEW.

COMPACTION:
COMPACTION AROUND PUMP STATION SITE IS TO BE HOLD POINT & SHALL BE IN ACCORDANCE WITH AS1289.5 AND QUALIFIED GEOTECHNICAL ENGINEER SHALL BE ON SITE DURING COMPACTION FOR SUPERVISION & CERTIFICATION IN ACCORDANCE WITH REQUIREMENTS & RECOMMENDATIONS SPECIFIED BY SITE SPECIFIC GEOTECHNICAL ENGINEERS.

GEOTEXTILE AND/OR GEOGRID REINFORCEMENT:
INSTALL GEOTEXTILE / GEOGRID REINFORCEMENT OR SUITABLE MEASURES AGAINST SETTLEMENT AND OTHER ADVERSITIES IN ACCORDANCE WITH SITE SPECIFIC GEOTECHNICAL ENGINEER'S REQUIREMENTS & RECOMMENDATIONS

EXCAVATION REQUIREMENTS:
EXCAVATION SUPPORT (I.E. BATTER SLOPES, SHIELD SUPPORT / SHORING BOX ETC.) TO BE DESIGNED AND CONSTRUCTED BY CIVIL CONTRACTORS IN ACCORDANCE WITH SITE SPECIFIC GEOTECHNICAL ENGINEER'S REQUIREMENTS & RECOMMENDATIONS

TESTING AND INSPECTION:
TESTING & INSPECTION IS TO BE **HOLD POINT** AND TO BE IN ACCORDANCE WITH THE MINIMUM FIELD DENSITY TESTING FREQUENCY/EXTENT, LEVEL OF SUPERVISION REQUIREMENTS ETC. SPECIFIED BY THE SITE SPECIFIC GEOTECHNICAL ENGINEERS PRIOR TO THE COMMENCEMENT OF CONSTRUCTION. INSPECTION OF THE CIVIL CONTRACTOR SITE WORKS AND METHOD OF INSTALLATION MUST BE PERFORMED BY A QUALIFIED GEOTECHNICAL ENGINEER TO VERIFY THE STANDARDS REQUIREMENTS HAVE BEEN MET.

SITE SPECIFIC RECOMMENDATION:
1. GEOTECHNICAL SUPERVISION DURING CONSTRUCTION IS RECOMMENDED TO ASSIST THE CONSTRUCTION AND EVALUATE THE EXCAVATION STABILITY. CONTRACTORS TO LIAISE WITH SITE SPECIFIC GEOTECHNICAL ENGINEERS FOR TESTING REQUIREMENTS (I.E FIELD DENSITY TESTING FREQUENCY/EXTENT) & INSPECTION REQUIREMENTS (I.E. LEVEL OF SUPERVISION), AND TO BE IN ACCORDANCE WITH SITE SPECIFIC GEOTECHNICAL ENGINEERS ADVISE.
2. CONTRACTORS TO ADHERE TO ANY EARTHWORK, EXCAVATION, BACKFILL, CONSTRUCTION, SITE SPECIFIC TREATMENT REQUIREMENTS/RECOMMENDATIONS SPECIFIED BY SITE SPECIFIC GEOTECHNICAL ENGINEERS (I.E. DRAINAGE MEASURES, DE-WATERING MEASURES, GEOTEXTILE/GEOGRID REINFORCEMENT MEASURES AGAINST SETTLEMENT, EXCAVATION SUPPORT REQUIREMENTS, EROSION & SEDIMENT CONTROL MEASURES, MOISTURE CONTROL MEASURES, TREE REMOVAL/PLANTATION MEASURES, ROOT TREATMENTS, ACID SULFATE SOIL MANAGEMENT MEASURES).
3. CONTRACTORS TO ENSURE BEARING CAPACITY > 100 KPA IS AVAILABLE AT FOUNDATIONS.
4. CONTRACTORS TO REMOVE ANY EXISTING SOIL (I.E FILL, TOPSOIL, DISTURBED/WEAKENED SOILS, ORGANIC/DELETERIOUS/PERISHABLEMATTER) FROM THE PUMP STATION SITE, SPECIFIED BY SITE SPECIFIC GEOTECHNICAL ENGINEERS AS NOT RECOMMENDED/SUITABLE FOR STRUCTURAL FILL.
5. CONTRACTORS TO TAKE NECESSARY PRECAUTIONS/ TREATMENTS TO PREVENT ANY STRUCTURAL DAMAGES TO THE PUMP STATION STRUCTURES & PIPEWORK DUE TO ANY ADVERSE SITE SOIL CONDITIONS (I.E. FILL, CONTAMINATED/ REACTIVE/ SOFT/ COLLAPSING/DISPERSIVE/ FISSURED SOILS, SETTLEMENTS, ABNORMAL MOISTURE CONDITIONS, TREES/ROOTS, ACID SULFATE SOIL)
6. CONTRACTOR TO INVESTIGATE IF THERE ARE ANY UNDERGROUND SERVICES PRIOR TO COMMENCEMENT OF EXCAVATIONS.
7. DURING CONSTRUCTION THE CONTRACTOR SHALL BE RESPONSIBLE FOR MAINTAINING THE STRUCTURE IN A STABLE CONDITION AND ENSURING NO PART SHALL BE OVERSTRESSED UNDER CONSTRUCTION ACTIVITIES.
8. ALL EARTHWORKS SHALL BE CARRIED OUT IN ACCORDANCE WITH AS 3798-2007
9. CONTRACTOR TO GAIN SITE SPECIFIC GEOTECHNICAL ENGINEER'S DIRECTION THAT THE PROPOSED BACKFILL DETAILED ON THIS DRAWING IS APPROPRIATE FOR EXISTING SITE/SOIL AND ON-SITE LOADING CONDITIONS PRIOR TO COMMENCING CONSTRUCTION **(HOLD POINT)**

CIVIL CONTRACTOR SCOPE OF WORKS | AQUATEC SCOPE OF WORKS

REV	REVISION DETAILS	DRN	CKD	APP	DATE	REF. NUMBER	REFERENCE DOCUMENT
1	ISSUED FOR CONSTRUCTION	CV	NP		19/12/23	19855-80103	WETWELL BUOYANCY CALCULATIONS

Aquatec Fluid Systems Pty Ltd
www.aquatecenviro.com
ABN - 94 114 944 026
2 Provincial Crescent, Shepparton VIC 3630
T 1300 088 555 / E info@aquatecenviro.com

© Copyright - This drawing and design must not be copied in whole or in part without the written consent of Aquatec Environmental Group Pty Ltd.

Any literary or artistic works contained in this document are copyright Aquatec Environmental Group Pty Ltd ACN 112 325 434 (Aquatec Fluid Systems). Any information in this document, except information also available in publically available sources, is confidential to Aquatec. Reproduction of this document or part of it, or disclosure of the information contained in it, is not permitted without the written consent of Aquatec.

AQUATEC

Drawn	RS
Checked	JS
Approved	
Scale	AS SHOWN
This Drawing must not be used for Construction unless signed as Approved	Original Size A1

Client: ISLAND PLUMBING & GAS
Project: NORFOLK ISLAND MAIN SPS
JOB: SEWER PUMP STATION
Title: BACKFILL DETAILS (SPS 3)

OP19855	ISSUED FOR CONSTRUCTION (IFC01)	19855 - 20301	1
Project Number	Customer Submission Status	Drawing Number	Revision

Plot Date: 19/12/2023 Plotted by: Conrado Viray Cad File No: C:\Users\cviray\Documents\OP19855 Norfolk Island\Wip\OP19855 NORFOLK ISLAND SPS IFC01.dwg

NON-TRAFFICABLE INSTALLATION

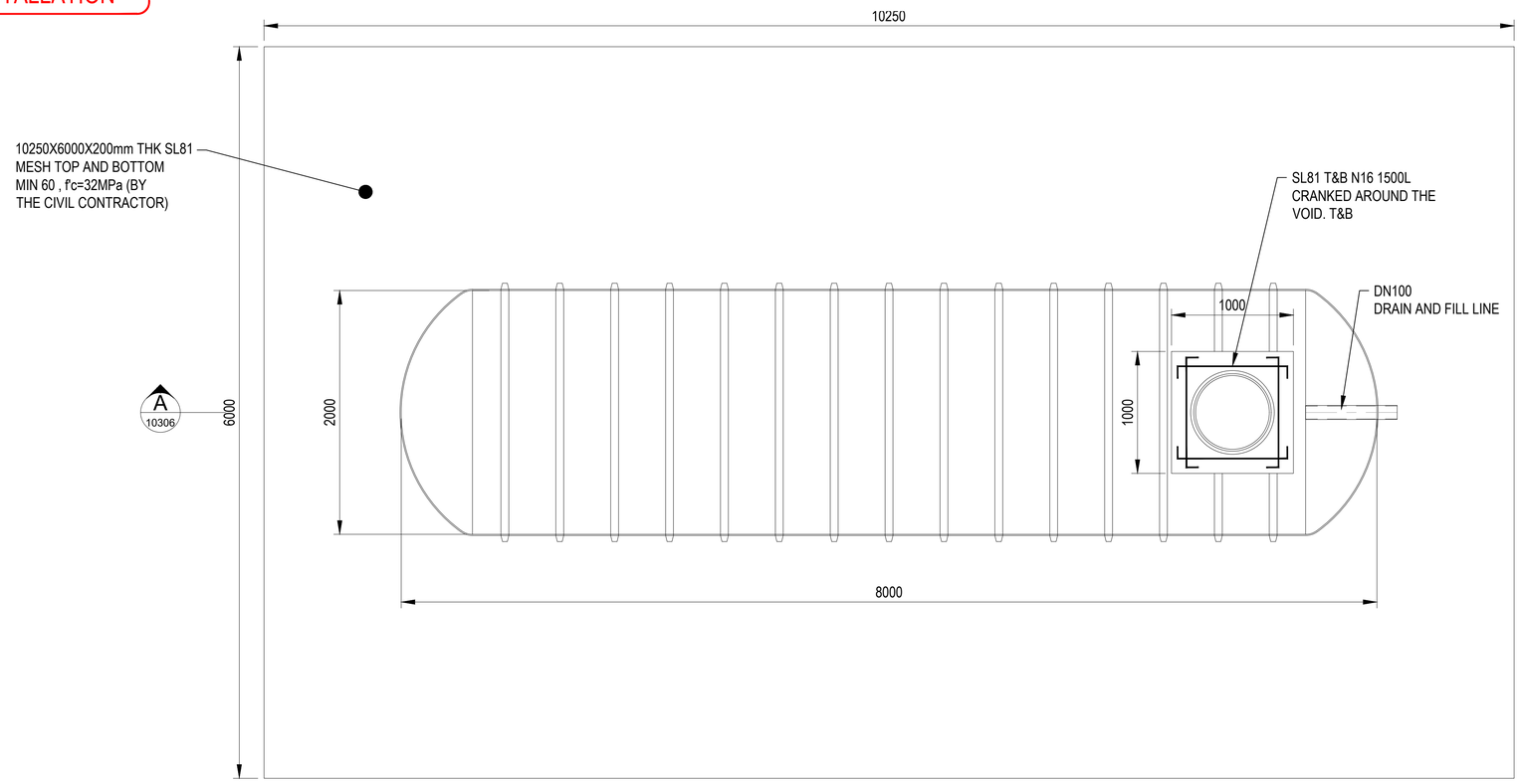

ESV PLAN VIEW

SCALE 1:25

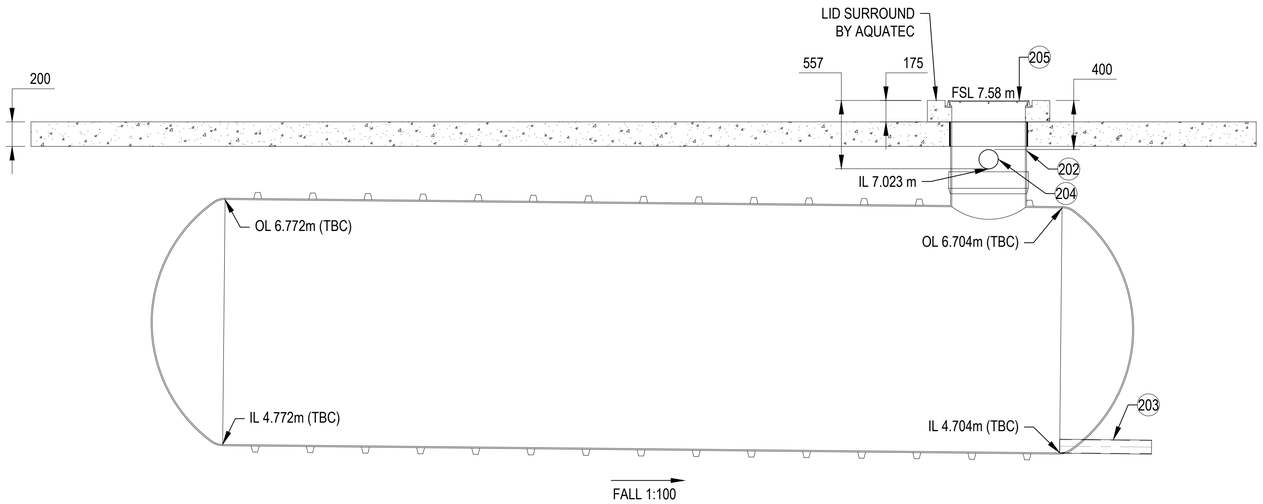

SECTION A 10306

SCALE 1:25

0 500 1000 1500 2000 2500mm

SCALE 1:25 mm

TANK SPECIFICATION	
DESIGN SPECIFICATION	
TOTAL VOLUME	23.7 kL
TANK WEIGHT	1350 KG APPROX.
DESIGN TEMPERATURE	45°C
CONTENTS	SEWERAGE
CORROSION ALLOWANCE	3mm CORROSION BARRIER
SPECIFIC GRAVITY	1.0t/m³
HYDROSTATIC TESTING	FILLED WITH WATER TO OVERFLOW
MATERIAL SPECIFICATION	
SHELL	GRP
ENDS	GRP
MANHOLE	GRP
SURFACE FINISHES	
INTERNAL COATING	CHEMICAL RESISTANT RESIN
EXTERNAL COATING	ISOPHTHALIC FLOWCOAT
COLOUR	MIST GREEN

CIVIL CONTRACTOR SCOPE OF WORKS | AQUATEC SCOPE OF WORKS

REV	REVISION DETAILS	DRN	CKD	APP	DATE	REF. NUMBER	REFERENCE DOCUMENT
1	ISSUED FOR CONSTRUCTION	CV	NP		19/12/23		

Aquatec Fluid Systems Pty Ltd
www.aquatecenviro.com
ABN - 94 114 944 026
2 Provincial Crescent, Shepparton VIC 3630
T 1300 088 555 / E info@aquatecenviro.com

© ***Copyright*** - This drawing and design must not be copied in whole or in part without the written consent of Aquatec Environmental Group Pty Ltd.

Any literary or artistic works contained in this document are copyright Aquatec Environmental Group Pty Ltd ACN 112 325 434 (Aquatec Fluid Systems). Any information in this document, except information also available in publically available sources, is confidential to Aquatec. Reproduction of this document or part of it, or disclosure of the information contained in it, is not permitted without the written consent of Aquatec.

AQUATEC

Drawn	RS
Checked	JS
Approved	
Scale	AS SHOWN
This Drawing must not be used for Construction unless signed as Approved	Original Size A1

Client	ISLAND PLUMBING & GAS
Project	NORFOLK ISLAND MAIN SPS
JOB	SEWER PUMP STATION
Title	ESV - PLAN (SPS 3)

OP19855	ISSUED FOR CONSTRUCTION (IFC01)	19855 - 10306	1
Project Number	Customer Submission Status	Drawing Number	Revision

Plot Date: 19/12/2023 Plotted by: Conrado Viray Cad File No: C:\Users\cviray\Documents\OP19855 Norfolk Island\Wip\OP19855 NORFOLK ISLAND SPS IFC01.dwg

NON-TRAFFICABLE INSTALLATION

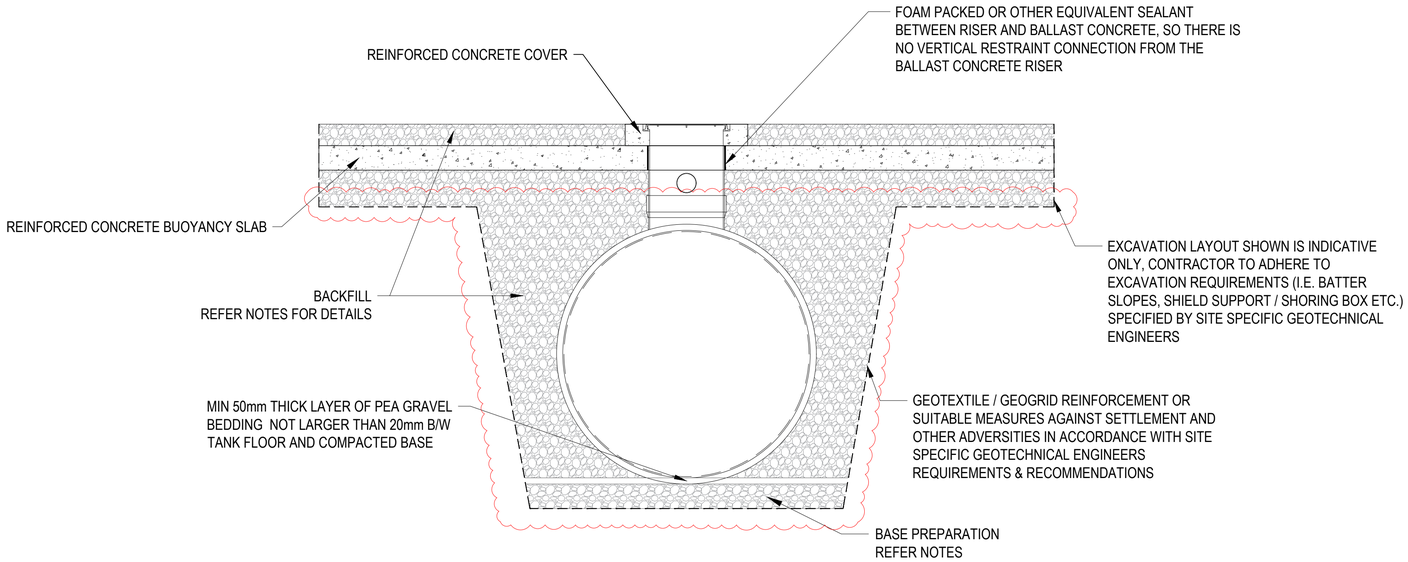

ESV BACKFILL

SCALE 1:25

0 500 1000 1500 2000 2500mm

SCALE 1:25 mm

CONSTRUCTION NOTES AND BACKFILLING REQUIREMENTS FOR EMERGENCY STORAGE VESSEL INSTALLATION (GRAVITY SEWER / RISING MAIN TRENCH FILLING, PIPE EMBEDMENT AND ANY OTHER BACKFILL / BULK EARTHWORKS OUTSIDE THE ESV INSTALLATION TO BE DESIGNED & CONSTRUCTED BY CIVIL CONTRACTORS)

OCCUPATIONAL HEALTH AND SAFETY:
THE CONTRACTOR IS RESPONSIBLE TO BE KNOWLEDGEABLE OF AND IS BOUND BY THE OH&S STATUTORY REQUIREMENTS PERTAINING TO WORK IN DEEP TRENCHES AND SHAFTS.

THE WATER AUTHORITY:
THE SPECIFICATIONS OF THE RELEVANT PRINCIPLE WATER AUTHORITY FOR THE INSTALLATION AND CONSTRUCTION OF STORAGE VESSEL ARE TO BE ADHERED TO IN ADDITION TO THESE CONSTRUCTION RECOMMENDATIONS.

SITE INVESTIGATION:
CONTRACTORS TO LIAISE WITH THEIR GEOTECHNICAL/CONSULTING ENGINEER TO CONDUCT A SITE/GEOTECHNICAL INVESTIGATION TO ESTABLISH INDICATIVE SUBSURFACE CONDITIONS PRIOR TO THE COMMENCEMENT OF CONSTRUCTION.

BACKFILL DESIGN ASSUMPTIONS & NOTES:
1. SINCE THERE IS NO SITE SPECIFIC GEOTECHNICAL REPORT AVAILABLE, BACKFILL DETAILED ON THIS DRAWING ARE BASED ON NORMAL SITE CONDITION FREE OF ANY ADVERSE SITE/SOIL CONDITIONS
2. GROUNDWATER LEVEL IS ASSUMED AT FINISHED SURFACE LEVEL FOR WORST CASE FOR THE ESV BUOYANCY CALCULATIONS

FOUNDATION:
FOUNDATION MATERIAL - 20MM OF COMPACTED ROAD BASE (CLASS 2 FCR) WITH MIN. COMPACTION OF 98% STANDARD IN ACCORDANCE WITH AS1289. ALTERNATIVELY, GRADE N20 MASS CONCRETE MAY BE CAST AS A SUB BASE WITH 50MM LAYER OF COMPACTED SAND BEDDING TO ACHIEVE THE FINISHED PREPARED BASE LEVEL
1. EXCAVATION DEPTH IS TO BE A MINIMUM OF 200MM BELOW TANK BASE AND MAY BE DEEPER AS REQUIRED (OR POURING ADDITIONAL BLINDING) TO ACHIEVE A MINIMUM FOUNDATION BEARING CAPACITY OF 100KPA (**HOLD POINT)**
2. WHERE OVER EXCAVATION HAS OCCURRED BELOW THE TANK, SUCH OVER EXCAVATION SHALL BE FILLED WITH ABOVE MENTIONED FOUNDATION MATERIAL TO THE ENGINEER'S SATISFACTION.
3. PREPARE 200mm THICK LAYER SUB-BASE WITH ABOVE MENTIONED FOUNDATION MATERIAL.
4. USE A VIBRATING FLAT PLATE OR SMOOTH DRUM ROLLER TO CAPACITY IN MAXIMUM LIFTS OF 200MM TO ACHIEVE MIN. COMPACTION OF 98% STANDARD IN ACCORDANCE WITH AS1289
5. REMOVE OR STOCKPILE SPOIL AS REQUIRED.
6. BASE FOUNDATION SHALL BE INSPECTED BY AN EXPERIENCED GEO-TECHNICAL ENGINEER TO CONFIRM MINIMUM BEARING REQUIRED AND THERE IS NO RISK OF SETTLEMENT.
7. PLACE MIN 50mm THICK LAYER OF PEA GRAVEL AS PER AS2758.1 NOT LARGER THAN 20mm BACKFILL BETWEEN TANK FLOOR AND COMPACTED BASE

BACKFILL:
MAX. 20MM SINGLE SIZE PEA GRAVEL OR CRUSHED ROCK,
1. IN ACCORDANCE WITH AS 2566.2 TABLE G2;
2. MIN. RELATIVE COMPACTION 70% DENSITY INDEX AS PER AS 2566.2 CL 5.6.3
3. CRUSHED SOFT LIMESTONE, SANDSTONE OR SHALE SHOULD NOT BE USED
4. MIN. DENSITY 1800 kg/m^3 FOR BUOYANCY CALCULATION (HOLD POINT)

PERIMETER:
PLACE COMPACTED BACKFILL UP TO FINISHED NATURAL SURFACE LEVEL AROUND ITS PERIMETER.
MAINTAIN GOOD TRANSITION BETWEEN ORIGINAL SURFACES AND THE NEW.

COMPACTION:
COMPACTION AROUND ESV SITE IS TO BE HOLD POINT & SHALL BE IN ACCORDANCE WITH AS1289.5 AND QUALIFIED GEOTECHNICAL ENGINEER SHALL BE ON SITE DURING COMPACTION FOR SUPERVISION & CERTIFICATION IN ACCORDANCE WITH REQUIREMENTS & RECOMMENDATIONS SPECIFIED BY SITE SPECIFIC GEOTECHNICAL ENGINEERS.

GEOTEXTILE AND/OR GEOGRID REINFORCEMENT:
INSTALL GEOTEXTILE / GEOGRID REINFORCEMENT OR SUITABLE MEASURES AGAINST SETTLEMENT AND OTHER ADVERSITIES IN ACCORDANCE WITH SITE SPECIFIC GEOTECHNICAL ENGINEER'S REQUIREMENTS & RECOMMENDATIONS

EXCAVATION REQUIREMENTS:
EXCAVATION SUPPORT (I.E. BATTER SLOPES, SHIELD SUPPORT / SHORING BOX ETC.) TO BE DESIGNED AND CONSTRUCTED BY CIVIL CONTRACTORS IN ACCORDANCE WITH SITE SPECIFIC GEOTECHNICAL ENGINEER'S REQUIREMENTS & RECOMMENDATIONS

TESTING AND INSPECTION:
TESTING & INSPECTION IS TO BE HOLD POINT AND TO BE IN ACCORDANCE WITH THE MINIMUM FIELD DENSITY TESTING FREQUENCY/EXTENT, LEVEL OF SUPERVISION REQUIREMENTS ETC. SPECIFIED BY THE SITE SPECIFIC GEOTECHNICAL ENGINEERS PRIOR TO THE COMMENCEMENT OF CONSTRUCTION. INSPECTION OF THE CIVIL CONTRACTOR SITE WORKS AND METHOD OF INSTALLATION MUST BE PERFORMED BY A QUALIFIED GEOTECHNICAL ENGINEER TO VERIFY THE STANDARDS REQUIREMENTS HAVE BEEN MET.

SITE SPECIFIC RECOMMENDATION:
1. GEOTECHNICAL SUPERVISION DURING CONSTRUCTION IS RECOMMENDED TO ASSIST THE CONSTRUCTION AND EVALUATE THE EXCAVATION STABILITY. CONTRACTORS TO LIAISE WITH SITE SPECIFIC GEOTECHNICAL ENGINEERS FOR TESTING REQUIREMENTS (I.E FIELD DENSITY TESTING FREQUENCY/EXTENT) & INSPECTION REQUIREMENTS (I.E. LEVEL OF SUPERVISION), AND TO BE IN ACCORDANCE WITH SITE SPECIFIC GEOTECHNICAL ENGINEERS ADVISE.
2. CONTRACTORS TO ADHERE TO ANY EARTHWORK, EXCAVATION, BACKFILL, CONSTRUCTION, SITE SPECIFIC TREATMENT REQUIREMENTS/RECOMMENDATIONS SPECIFIED BY SITE SPECIFIC GEOTECHNICAL ENGINEERS (I.E. DRAINAGE MEASURES, DE-WATERING MEASURES, GEOTEXTILE/GEOGRID REINFORCEMENT MEASURES AGAINST SETTLEMENT, EXCAVATION SUPPORT REQUIREMENTS, EROSION & SEDIMENT CONTROL MEASURES, MOISTURE CONTROL MEASURES, TREE REMOVAL/PLANTATION MEASURES, ROOT TREATMENTS, ACID SULFATE SOIL MANAGEMENT MEASURES).
3. CONTRACTORS TO ENSURE BEARING CAPACITY > 100 KPA IS AVAILABLE AT FOUNDATIONS.
4. CONTRACTORS TO REMOVE ANY EXISTING SOIL (I.E FILL, TOPSOIL, DISTURBED/WEAKENED SOILS, ORGANIC/DELETERIOUS/PERISHABLEMATTER) FROM THE ESV SITE, SPECIFIED BY SITE SPECIFIC GEOTECHNICAL ENGINEERS AS NOT RECOMMENDED/SUITABLE FOR STRUCTURAL FILL.
5. CONTRACTORS TO TAKE NECESSARY PRECAUTIONS/ TREATMENTS TO PREVENT ANY STRUCTURAL DAMAGES TO THE ESV STRUCTURES & PIPEWORK DUE TO ANY ADVERSE SITE SOIL CONDITIONS (I.E. FILL, CONTAMINATED/ REACTIVE/ SOFT/ COLLAPSING/DISPERSIVE/ FISSURED SOILS, SETTLEMENTS, ABNORMAL MOISTURE CONDITIONS, TREES/ROOTS, ACID SULFATE SOIL)

CIVIL CONTRACTOR SCOPE OF WORKS | AQUATEC SCOPE OF WORKS

REV	REVISION DETAILS	DRN	CKD	APP	DATE	REF. NUMBER	REFERENCE DOCUMENT
1	ISSUED FOR CONSTRUCTION	CV	NP		19/12/23	19855-80102	ESV BUOYANCY CALCULATIONS

Aquatec Fluid Systems Pty Ltd
www.aquatecenviro.com
ABN - 94 114 944 026
2 Provincial Crescent, Shepparton VIC 3630
T 1300 088 555 / E info@aquatecenviro.com

© Copyright - This drawing and design must not be copied in whole or in part without the written consent of Aquatec Environmental Group Pty Ltd.

Any literary or artistic works contained in this document are copyright Aquatec Environmental Group Pty Ltd ACN 112 325 434 (Aquatec Fluid Systems). Any information in this document, except information also available in publically available sources, is confidential to Aquatec. Reproduction of this document or part of it, or disclosure of the information contained in it, is not permitted without the written consent of Aquatec.

AQUATEC

Drawn	RS
Checked	JS
Approved	
Scale	AS SHOWN

This Drawing must not be used for Construction unless signed as Approved

Original Size A1

Client: ISLAND PLUMBING & GAS
Project: NORFOLK ISLAND MAIN SPS
JOB: SEWER PUMP STATION
Title: ESV - BACKFILL DETAILS (SPS 3)

OP19855	ISSUED FOR CONSTRUCTION (IFC01)	19855 - 20302	1
Project Number	Customer Submission Status	Drawing Number	Revision

Plot Date: 19/12/2023 Plotted by: Conrado Viray Cad File No: C:\Users\cviray\Documents\OP19855 Norfolk Island\Wip\OP19855 NORFOLK ISLAND SPS IFC01.dwg

ESV - BILL OF MATERIALS

MATERIAL SCHEDULE				
ITEM NUMBER	DESCRIPTION	QUANTITY	MATERIAL	REMARKS
201	ESV TANK -	1	FRP	
202	600 DIA RISER	2	FRP	
203	SP-SP DN100 PIPE	1	PVC-U DWV SN8	
204	DN100 VENT STUB	2	PVC-U DWV SN6	
205	600 mm CIRCULAR SOLID TOP ACCESS COVER CLASS B RATED	1	CAST IRON	EJ

PRELIMINARY (IFR)
NOT FOR CONSTRUCTION

REV	REVISION DETAILS	DRN	CKD	APP	DATE	REF. NUMBER	REFERENCE DOCUMENT
1	ISSUED FOR CONSTRUCTION	CV	NP		19/12/23		

Aquatec Fluid Systems Pty Ltd
www.aquatecenviro.com
ABN - 94 114 944 026
2 Provincial Crescent, Shepparton VIC 3630
T 1300 088 555 / E info@aquatecenviro.com

© Copyright - This drawing and design must not be copied in whole or in part without the written consent of Aquatec Environmental Group Pty Ltd.

Any literary or artistic works contained in this document are copyright Aquatec Environmental Group Pty Ltd ACN 112 325 434 (Aquatec Fluid Systems). Any information in this document, except information also available in publically available sources, is confidential to Aquatec. Reproduction of this document or part of it, or disclosure of the information contained in it, is not permitted without the written consent of Aquatec.

AQUATEC

Drawn	RS
Checked	JS
Approved	
Scale	AS SHOWN
This Drawing must not be used for Construction unless signed as Approved	Original Size A1

Client	ISLAND PLUMBING & GAS
Project	NORFOLK ISLAND MAIN SPS
JOB	SEWER PUMP STATION
Title	ESV - BILL OF MATERAILS (SPS 3)

OP19855	ISSUED FOR CONSTRUCTION (IFC01)	19855 - 10307	1
Project Number	Customer Submission Status	Drawing Number	Revision

Plot Date: 19/12/2023 Plotted by: Conrado Viray Cad File No: C:\Users\cviray\Documents\OP19855 Norfolk Island\Wip\OP19855 NORFOLK ISLAND SPS IFC01.dwg

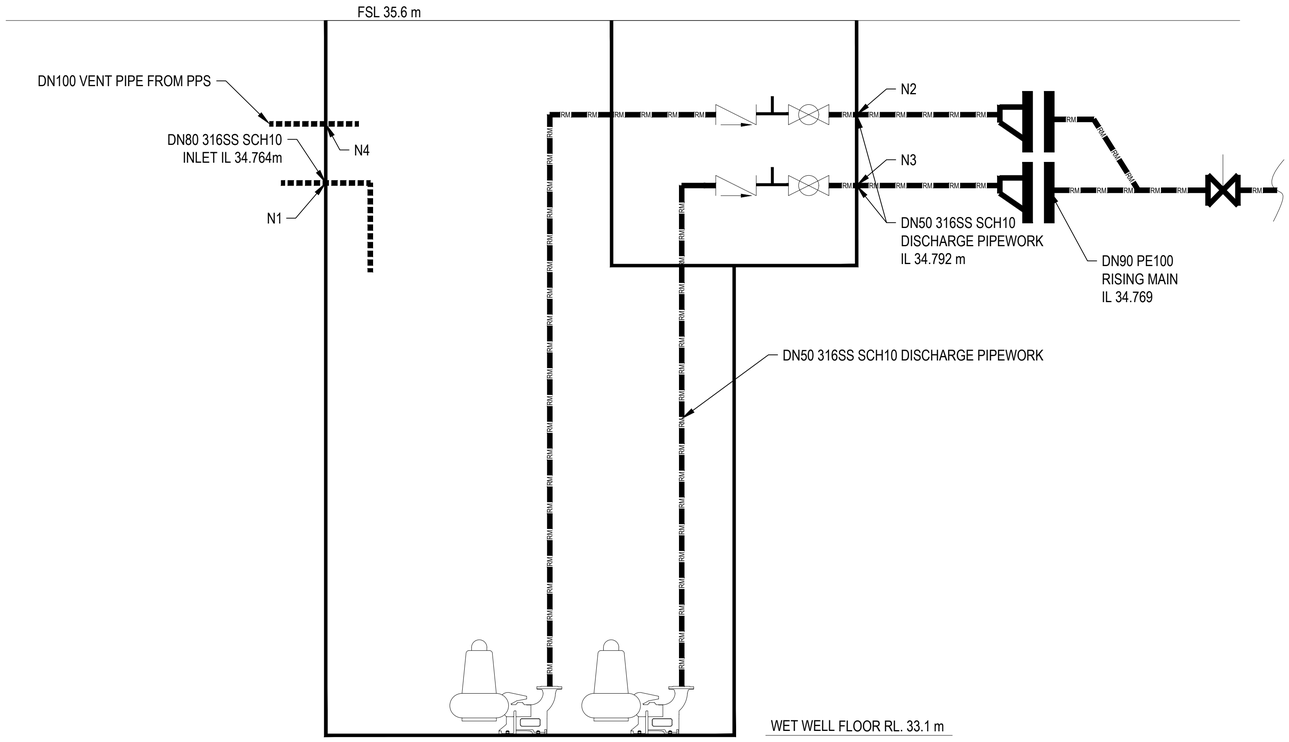

HYDRAULIC SCHEMATIC DIAGRAM

SCALE: NTS

CIVIL CONTRACTOR SCOPE OF WORKS | AQUATEC SCOPE OF WORKS

REV	REVISION DETAILS	DRN	CKD	APP	DATE	REF. NUMBER	REFERENCE DOCUMENT
1	ISSUED FOR CONSTRUCTION	CV	NP		19/12/23		

Aquatec Fluid Systems Pty Ltd
www.aquatecenviro.com
ABN - 94 114 944 026
2 Provincial Crescent, Shepparton VIC 3630
T 1300 088 555 / E info@aquatecenviro.com

© ***Copyright*** - This drawing and design must not be copied in whole or in part without the written consent of Aquatec Environmental Group Pty Ltd.

Any literary or artistic works contained in this document are copyright Aquatec Environmental Group Pty Ltd ACN 112 325 434 (Aquatec Fluid Systems). Any information in this document, except information also available in publically available sources, is confidential to Aquatec. Reproduction of this document or part of it, or disclosure of the information contained in it, is not permitted without the written consent of Aquatec.

AQUATEC

Drawn	RS
Checked	JS
Approved	
Scale	AS SHOWN
This Drawing must not be used for Construction unless signed as Approved	Original Size A1

Client	ISLAND PLUMBING & GAS
Project	NORFOLK ISLAND MAIN SPS
JOB	SEWER PUMP STATION
Title	HYDRAULIC SCHEMATIC DIAGRAM (SPS 4)

OP19855	ISSUED FOR CONSTRUCTION (IFC01)	19855-40401	1
Project Number	Customer Submission Status	Drawing Number	Revision

Plot Date: 19/12/2023 Plotted by: Conrado Viray Cad File No: C:\Users\cviray\Documents\OP19855 Norfolk Island\Wip\OP19855 NORFOLK ISLAND SPS IFC01.dwg

NON-TRAFFICABLE INSTALLATION

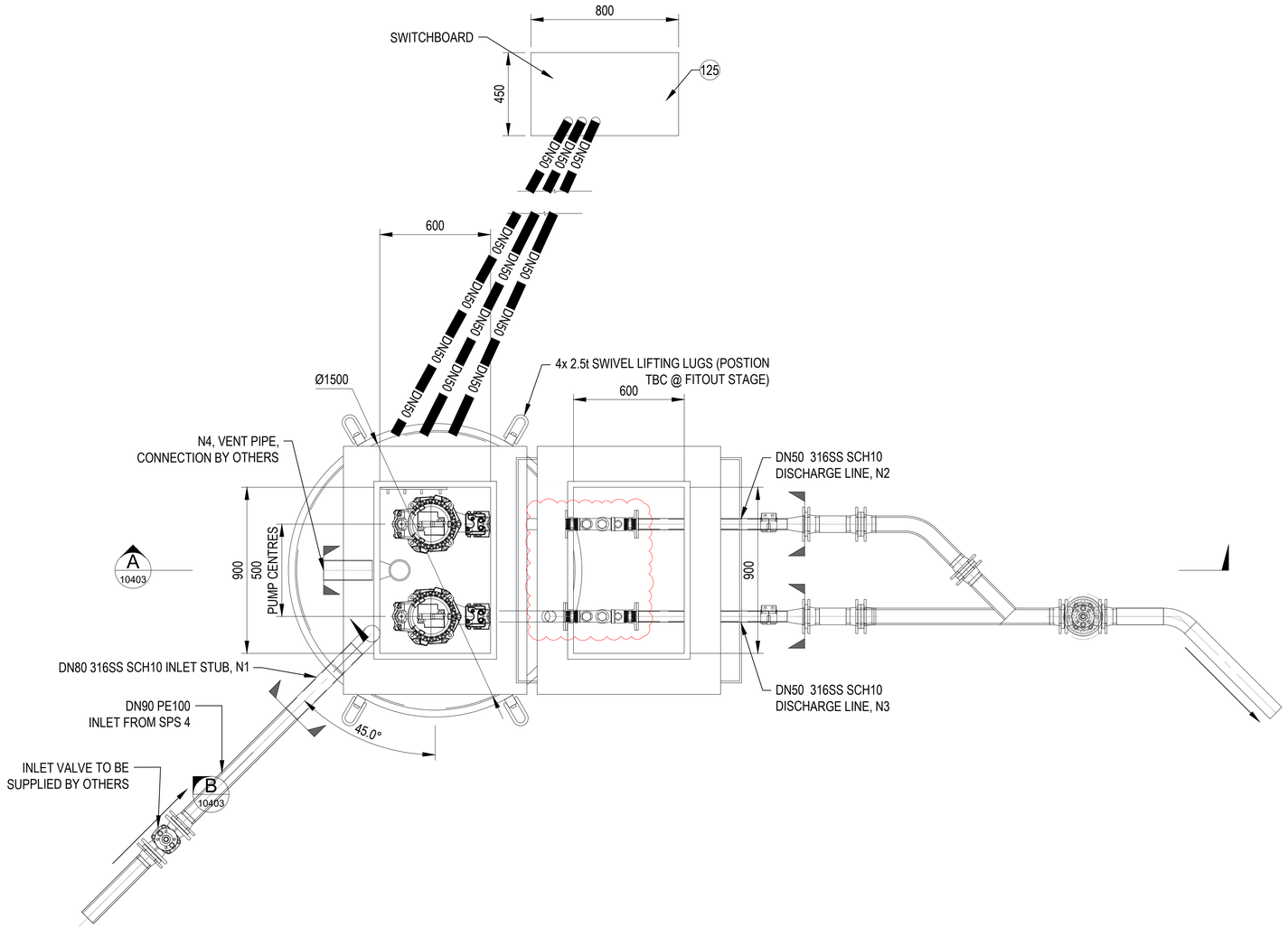

GENERAL NOTES:

1. PUMP STATION TO BE AQUATEC MODEL: AFPS20/3500IV/OP19855
2. ALL FRP PENETRATIONS TO EB GLASSED INTO THE FRP VESSEL.
3. REINFORCEMENT TO COMPLY WITH AS4671.
4. ALL HOLES TO BE PRE CORED AND GLASSED.
5. ALL FLANGES TO BE DRILLED TO AS4087 PN16 UNO (FLANGE DRILLING TO BE SAME AS TABLE D FLANGE)
6. FRP PIPE PENETRATION & 316SS FIXINGS TO THE FRP WALL TO BE PERFORMED IN ACCORDANCE WITH AS2634
7. ELECTRICAL SWITCHBOARD DOORS TO HAVE MIN. 600mm CLEARANCE TO ANY SURROUNDING ABOVE GROUND STRUCTURE AS PER AS3000

PUMP DETAILS	
PUMP MAKE	XYLEM
PUMP MODEL	FLYGT MP3127
PUMP WEIGHT	98 KG
MOTOR SIZE	7.4 kW
IMPELLER TYPE / SIZE	194 mm
IMPELLER MATERIAL	GREY CAST IRON
PUMP OPERATION	DUTY / STAND-BY
PUMP CONTROL	VSD

PUMPING STATION DETAILS	
FINISHED SURFACE LEVEL RL	35.6 m
DISCHARGE PIPE IL (@ VC)	34.792 m
SEWER INLET PIPE DIAMETER	DN 80
SEWER INLET PIPE IL	34.764 m
WET WELL FLOOR RL	33.1 m

PLAN

SCALE 1:25

0 500 1000 1500 2000 2500mm

SCALE 1:25 mm

CIVIL CONTRACTOR SCOPE OF WORKS | AQUATEC SCOPE OF WORKS

REV	REVISION DETAILS	DRN	CKD	APP	DATE	REF. NUMBER	REFERENCE DOCUMENT
1	ISSUED FOR CONSTRUCTION	CV	NP		19/12/23		

Aquatec Fluid Systems Pty Ltd
www.aquatecenviro.com
ABN - 94 114 944 026
2 Provincial Crescent, Shepparton VIC 3630
T 1300 088 555 / E info@aquatecenviro.com

© ***Copyright*** - This drawing and design must not be copied in whole or in part without the written consent of Aquatec Environmental Group Pty Ltd.

Any literary or artistic works contained in this document are copyright Aquatec Environmental Group Pty Ltd ACN 112 325 434 (Aquatec Fluid Systems). Any information in this document, except information also available in publically available sources, is confidential to Aquatec. Reproduction of this document or part of it, or disclosure of the information contained in it, is not permitted without the written consent of Aquatec.

AQUATEC

Drawn	RS
Checked	JS
Approved	
Scale	AS SHOWN

This Drawing must not be used for Construction unless signed as Approved

Original Size A1

Client: ISLAND PLUMBING & GAS
Project: NORFOLK ISLAND MAIN SPS
JOB: SEWER PUMP STATION
Title: SPS - PLAN (SPS 4)

OP19855	ISSUED FOR CONSTRUCTION (IFC01)	19855 - 10402	1
Project Number	Customer Submission Status	Drawing Number	Revision

Plot Date: 19/12/2023 Plotted by: Conrado Viray Cad File No: C:\Users\cviray\Documents\OP19855 Norfolk Island\Wip\OP19855 NORFOLK ISLAND SPS IFC01.dwg

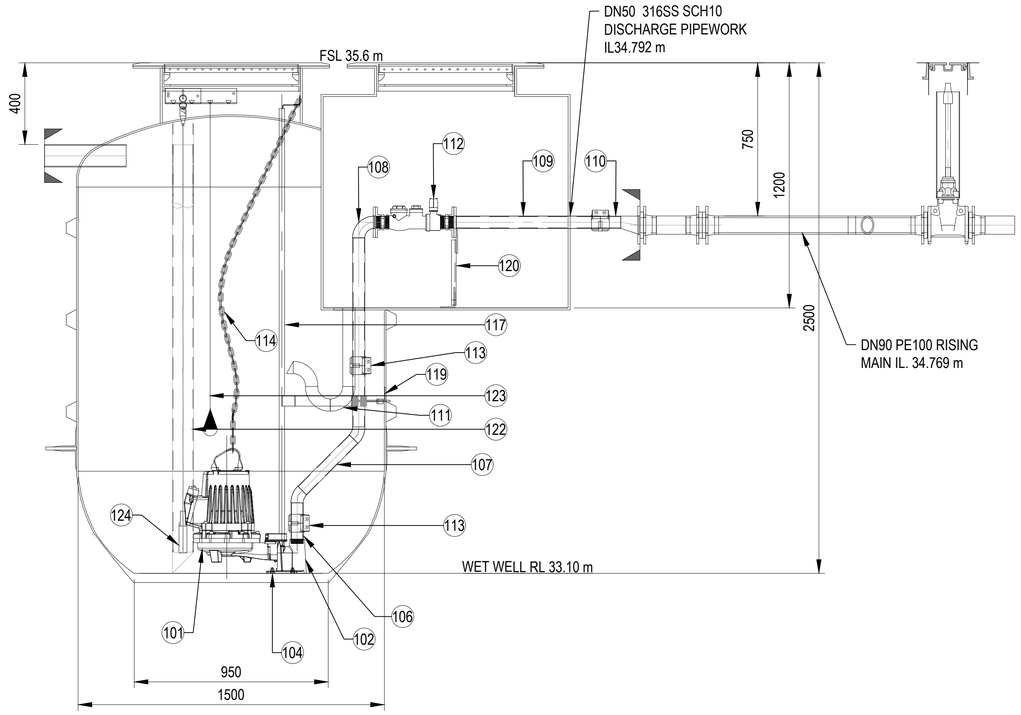

SECTION A
SCALE 1:15 10402

0 300 600 900 1200 1500mm
SCALE 1:15 mm

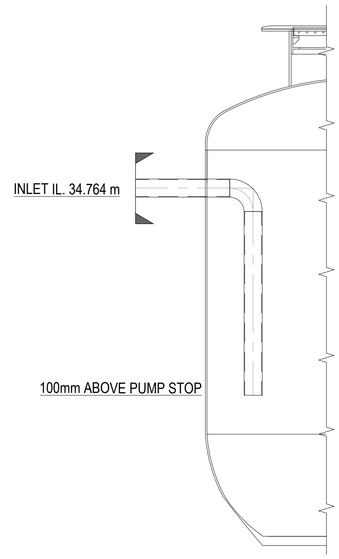

SECTION B
SCALE 1:15 10402

0 300 600 900 1200 1500mm
SCALE 1:15 mm

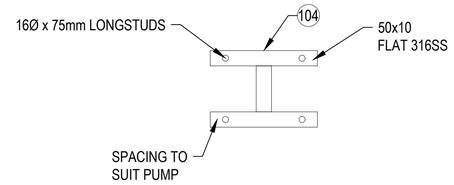

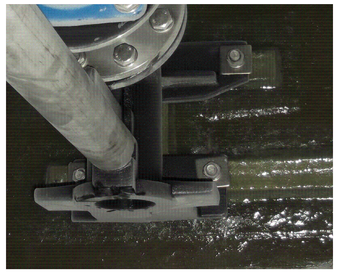

DETAIL 1
SCALE 1:10 10403

0 200 400 600 800 1000mm
SCALE 1:10 mm

CIVIL CONTRACTOR SCOPE OF WORKS | AQUATEC SCOPE OF WORKS

REV	REVISION DETAILS	DRN	CKD	APP	DATE	REF. NUMBER	REFERENCE DOCUMENT
1	ISSUED FOR CONSTRUCTION	CV	NP		19/12/23		

Aquatec Fluid Systems Pty Ltd
www.aquatecenviro.com
ABN - 94 114 944 026
2 Provincial Crescent, Shepparton VIC 3630
T 1300 088 555 / E info@aquatecenviro.com

© Copyright - This drawing and design must not be copied in whole or in part without the written consent of Aquatec Environmental Group Pty Ltd.

Any literary or artistic works contained in this document are copyright Aquatec Environmental Group Pty Ltd ACN 112 325 434 (Aquatec Fluid Systems). Any information in this document, except information also available in publically available sources, is confidential to Aquatec. Reproduction of this document or part of it, or disclosure of the information contained in it, is not permitted without the written consent of Aquatec.

AQUATEC

Drawn	RS
Checked	JS
Approved	
Scale	AS SHOWN

This Drawing must not be used for Construction unless signed as Approved

Original Size A1

Client: ISLAND PLUMBING & GAS
Project: NORFOLK ISLAND MAIN SPS
JOB: SEWER PUMP STATION
Title: SPS - SECTION (SPS 4)

OP19855	ISSUED FOR CONSTRUCTION (IFC01)	19855 - 10403	1
Project Number	Customer Submission Status	Drawing Number	Revision

Plot Date: 19/12/2023 Plotted by: Conrado Viray Cad File No: C:\Users\cviray\Documents\OP19855 Norfolk Island\Wip\OP19855 NORFOLK ISLAND SPS IFC01.dwg

SPS - BILL OF MATERIALS

MATERIAL SCHEDULE

ITEM NUMBER	DESCRIPTION	QUANTITY	MATERIAL	REMARKS
101	SUBMERSIBLE PUMP	2	CAST IRON	REFER PUMP DETAILS IN DRAWING 10402
102	PUMP PEDESTAL, DN50	2	CAST IRON	XYLEM, BSP CONNECTION
103	UPPER GUIDE RAIL BRACKETS	2	CAST IRON	XYLEM
104	PUMP BASE	2	316SS	
105	DN80 INLET PIPE ASSEMBLY: 1 QTY X DN80 90 DEG BEND 2 QTY X DN80 STRAIGHT PIPE	1	316SS SCH 10	
106	DN50 BSP-SP PIPEWORK	2	316SS SCH 10	LENGTH TO SUIT
107	DN50 SP-SP PIPEWORK, COMPRISING OF: 2 QTY X DN50 45 DEG BEND 3 QTY X DN50 STRAIGHT PIPE	2	316SS SCH 10	LENGTH TO SUIT
108	DN50 SP-FL PIPEWORK, COMPRISING OF: 1 QTY X DN50 90 DEG BEND 1 QTY X DN50 STRAIGHT PIPE 1 QTY X DN50 FLANGE	2	316SS SCH 10	LENGTH TO SUIT
109	DN50 FL-SP PIPEWORK, COMPRISING OF: 1 QTY X DN50 FLANGE 1 QTY X STRAIGHT PIPE	5	316SS SCH 10	
110	DN80-DN50 FL-SP PIPEWORK, COMPRISING OF: 1 QTY X DN50 FLANGE 1 QTY X STRAIGHT PIPE 1 QTY X ECCENTRIC REDUCER	2	316SS SCH 10	
111	DN50 DRAIN, COMPRISING OF: 1 QTY x FROG FLAP VALVE 4 QTY x 90 DEG. M/F ELBOWS 1 QTY x PIPE	2	PVC SN8 MIN.	
112	DN50 BOUNDARY KIT ASSEMBLY, COMPRISING OF 1 QTY X BOUNDARY KIT 2 QTY X HEX NIPPLE 2 QTY X BSP FLANGE AS4087	2	316SS	
113	DN50 GRIP-E COUPLING	6	STAINLESS STEEL	NORMA
114	6mm PUMP CHAINS, GR60, LOAD RATED 1 m SPACING W MASTER LINK EITHER ENDS & BOW SHACKLE	2	316SS	
115	CHAIN HOOKS	2	316SS	AQT PN 504501
116	FLOAT HOOK	1	316SS	AQT PN 627534
117	PUMP GUIDERAILS, 2"	2	316SS SCH 10	LENGTH TO SUIT
119	DN50 PIPE SUPPORT CLAMP TYPE TWIN LEG PIPE SUPPORT BRACKETS WITH ANTISPREAD GUIDERAIL BRACKET	2	316SS	REFER AQUATEC STD DWG AQSTD-00001 DETAIL 02
120	DN50 PIPE SUPPORT TWIN LEG PIPE SUPPORT BRACKETS	2	316SS	REFER AQUATEC STD DWG AQSTD-00001 DETAIL 04
121	1-PART ACCESS COVER WITH THE FOLLOWING 3 SIDED PROTECTION CLEAR OPENING 900X600 FLUSH MOUNTED WITH LOW PROFILE HINGES RUBBER SEAL UNDER LIDS , GAS TIGHT CONCEALED LOCK BOXES WITH STD KEY ENTRY REMOVABLE HINGED SAFETY GRATES & EASY LIFT HANDLES	1	ALUMINIUM	AUSTRAL TSP1068
122	STILLING TUBE, ABS, DN100, c/w BRACKETS	1	ABS	LENGTH TO SUIT,
123	FLOAT, LEVEL CONTROL	1	EPDM RUBBER	
124	LEVEL TRANSDUCER	1	-	AQUATEC
125	SWITCHBOARD	1	ALUMINIUM	REFER ELECTRICAL DRAWING SET.

REV	REVISION DETAILS	DRN	CKD	APP	DATE	REF. NUMBER	REFERENCE DOCUMENT
1	ISSUED FOR CONSTRUCTION	CV	NP		19/12/23		

Aquatec Fluid Systems Pty Ltd
www.aquatecenviro.com
ABN - 94 114 944 026
2 Provincial Crescent, Shepparton VIC 3630
T 1300 088 555 / E info@aquatecenviro.com

© Copyright - This drawing and design must not be copied in whole or in part without the written consent of Aquatec Environmental Group Pty Ltd.

Any literary or artistic works contained in this document are copyright Aquatec Environmental Group Pty Ltd ACN 112 325 434 (Aquatec Fluid Systems). Any information in this document, except information also available in publically available sources, is confidential to Aquatec. Reproduction of this document or part of it, or disclosure of the information contained in it, is not permitted without the written consent of Aquatec.

AQUATEC

Drawn	RS
Checked	JS
Approved	
Scale	AS SHOWN
This Drawing must not be used for Construction unless signed as Approved	Original Size A1

Client	ISLAND PLUMBING & GAS
Project	NORFOLK ISLAND MAIN SPS
JOB	SEWER PUMP STATION
Title	SPS - BILL OF MATERIALS (SPS 4)

OP19855	ISSUED FOR CONSTRUCTION (IFC01)	19855 - 10405	1
Project Number	Customer Submission Status	Drawing Number	Revision

NON-TRAFFICABLE INSTALLATION

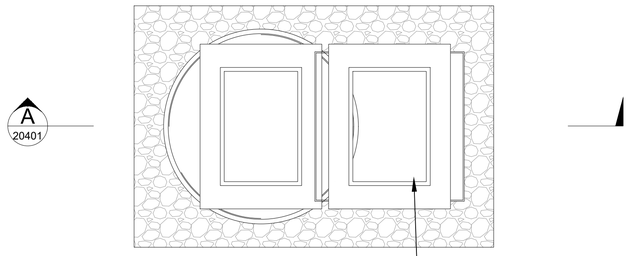

MIN. ALLOWABLE SOIL BEARING CAPACITY UNDERSIDE OF THE REINFORCED CONCRETE SLABS TO BE 100kPA OR AS PER ENGINEER'S REQUIREMENT

FOUNDATION SHALL BE INSPECTED BY AN EXPERIENCED GEO-TECHNICAL ENGINEER TO CONFIRM MINIMUM BEARING REQUIRED AND THERE IS NO RISK OF SETTLEMENT

SPS BACKFILL- PLAN

SCALE 1:25

0 500 1000 1500 2000 2500mm

SCALE 1:25 mm

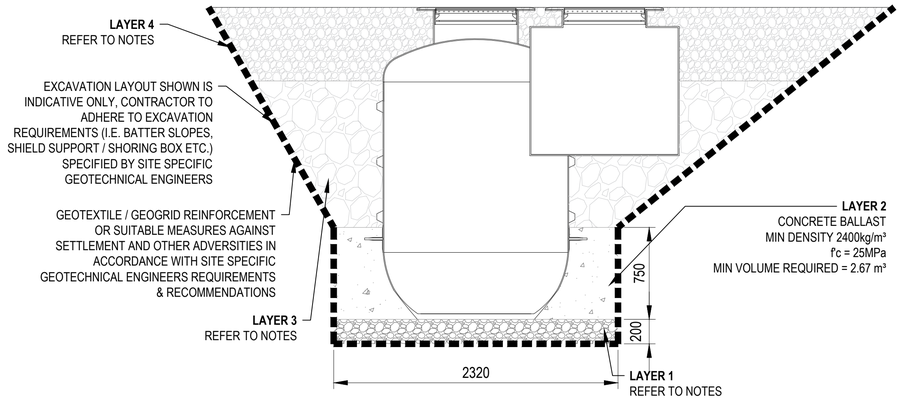

NOTE:
THE BALLAST CONCRETE HEIGHT NEED TO BE MIN. 150mm HIGH ABOE LOWEST RIB (BUOYANCY ANCHOR RIB)

SECTION A 20401

SCALE 1:25

0 500 1000 1500 2000 2500mm

SCALE 1:25 mm

CONSTRUCTION NOTES AND BACKFILLING REQUIREMENTS

CONSTRUCTION NOTES AND BACKFILLING REQUIREMENTS FOR PUMP STATION INSTALLATION (GRAVITY SEWER / RISING MAIN TRENCH FILLING, PIPE EMBEDMENT AND ANY OTHER BACKFILL / BULK EARTHWORKS OUTSIDE THE PUMP STATION INSTALLATION TO BE DESIGNED & CONSTRUCTED BY CIVIL CONTRACTORS)

OCCUPATIONAL HEALTH AND SAFETY:
THE CONTRACTOR IS RESPONSIBLE TO BE KNOWLEDGEABLE OF AND IS BOUND BY THE OH&S STATUTORY REQUIREMENTS PERTAINING TO WORK IN DEEP TRENCHES AND SHAFTS.

THE WATER AUTHORITY:
THE SPECIFICATIONS OF THE RELEVANT PRINCIPLE WATER AUTHORITY FOR THE INSTALLATION AND CONSTRUCTION OF PUMP STATION ARE TO BE ADHERED TO IN ADDITION TO THESE CONSTRUCTION RECOMMENDATIONS.

SITE INVESTIGATION:
CONTRACTORS TO LIAISE WITH THEIR GEOTECHNICAL/CONSULTING ENGINEER TO CONDUCT A SITE/GEOTECHNICAL INVESTIGATION TO ESTABLISH INDICATIVE SUBSURFACE CONDITIONS PRIOR TO THE COMMENCEMENT OF CONSTRUCTION.

BACKFILL DESIGN ASSUMPTIONS & NOTES:
1. BACKFILL DETAILED ON THIS DRAWING ARE BASED ON NORMAL SITE CONDITION.
2. GROUNDWATER LEVEL IS ASSUMED AT FSL FOR STRUCTURAL DESIGN & BUOYANCY / FLOATATION STABILITY CALCULATIONS.

LAYER 1 - FOUNDATION:
FOUNDATION MATERIAL - 20mm CLASS 2 CRUSHED ROCK (NATURAL GRAVEL OR QUARRIED MATERIALS). COMPACTION OF 98% MAXIMUM DRY DENSITY (STD) IN ACCORDANCE WITH AS1289.5.1.
ALTERNATIVELY, GRADE N20 MASS CONCRETE MAY BE CAST AS A SUB BASE WITH 50MM LAYER OF COMPACTED DRAINAGE AGGREGATE BEDDING TO ACHIEVE THE FINISHED PREPARED BASE LEVEL

1. EXCAVATION DEPTH IS TO BE A MINIMUM OF 200MM BELOW BASE OF CASTING AND MAY BE DEEPER AS REQUIRED (OR POURING ADDITIONAL BLINDING) TO ACHIEVE A MINIMUM FOUNDATION BEARING CAPACITY OF 100KPA, FOUNDATION SHALL BE INSPECTED BY AN EXPERIENCED GEO-TECHNICAL ENGINEER TO CONFIRM MINIMUM BEARING REQUIRED AND THERE IS NO RISK OF SETTLEMENT, **(HOLD POINT);**
2. WHERE OVER EXCAVATION HAS OCCURRED BELOW THE PITS, SUCH OVER EXCAVATION SHALL BE FILLED WITH ABOVE MENTIONED FOUNDATION MATERIAL TO THE ENGINEER'S SATISFACTION;
3. DO NOT SLUICE OR FLOOD THE BACKFILL INTO PLACE;
4. REMOVE OR STOCKPILE SPOIL AS REQUIRED;
5. BASE FOUNDATION SHALL BE INSPECTED BY AN EXPERIENCED GEO-TECHNICAL ENGINEER TO CONFIRM MINIMUM BEARING REQUIRED AND THERE IS NO RISK OF SETTLEMENT.

LAYER 2 - CONCRETE BALLAST
CONCRETE WITH MIN DENSITY = 2400kg/m³ AND MIN fc' = 25MPa
1. POUR CALCULATED VOLUME OF CONCRETE AS RETAINER BALLAST AROUND BASE OF UNIT TO RESIST BUOYANCY & MUST BE CONSTRUCTED TO THE DIMENSIONS SHOWN ON THE SECTION;
2. MIN 200MM CLEARANCE NEED TO BE PROVIDED BETWEEN PIPE / PIPE CONNECTIONS' EXTERNAL SURFACE AND CONCRETE BALLAST FOR THE PIPEWORK ENCROACHING CONCRETE BALLAST

LAYER 3 - BACKFILL:
BACKFILL MATERIAL - 20mm CLASS 4 CRUSHED ROCK (NATURAL GRAVEL OR QUARRIED MATERIALS).
1. COMPACTED TO MIN 95% RDD (STD) IN MAXIMUM LIFTS OF 200MM IN ACCORDANCE WITH AS1289.5.1. DO NOT SLUICE OR FLOOD THE BACKFILL INTO PLACE;
2. MIN DENSITY 1850 Kg/m3 (**HOLD POINT**);

LAYER 4 - BACKFILL:
BACKFILL MATERIAL - 20mm CLASS 2 CRUSHED ROCK (NATURAL GRAVEL OR QUARRIED MATERIALS).
1. COMPACTED TO MIN 98% MDD (STD) IN MAXIMUM LIFTS OF 200MM IN ACCORDANCE WITH AS1289.5.1. DO NOT SLUICE OR FLOOD THE BACKFILL INTO PLACE;
2. MIN DENSITY 1850 Kg/m3 (**HOLD POINT**);

MATERIAL SPECIFICATIONS:
NO BACKFILL PARTICLE SIZE GREATER 20MM AROUND OR SURROUNDING THE PITS IS ALLOWED. ALL CHOSEN MATERIALS SHALL BE IN ACCORDANCE WITH THE FOLLOWING, AS REQUIRED:
1. MRWA BACKFILL SPECIFICATION 04-03.2
2. VICROAD STANDARD 812
3. CONSULTING ENGINEERS SITE INVESTIGATION
4. WSAA PRODUCT SPECIFICATION & AS/NZS 2566.2

INTEGRAL VALVE CHAMBER INSTALLATION:
THE VALVE CHAMBER IS FULLY SELF SUPPORTING. TO SAFE GUARD AGAINST CAVITIES GETTING FORMED UNDERSIDE OF THE VALVE CHAMBER SEGMENT, BACK FILL AS FOLLOWS:
1. AFTER THE FINAL RING SECTION IS IN POSITION, PREPARE THE BACKFILL TO WITHIN 20MM OF THE TOP OUTER SEALING EDGE.
2. AQUATEC SITE REPRESENTATIVE ALONG WITH INSTALLATION CONTRACTOR TO CHECK AND ENSURE THAT THE BACKFILL IS SATISFACTORY.
3. LOWER THE VALVE CHAMBER INTO POSITION AND ENSURE AN EVEN SEAL UNDERNEATH RING SECTION

COVER SLAB INSTALLATION:
1. PREPARE THE COMPACTED GROUND TO THE TOP OF THE UPPERMOST WELL INCREMENT.
2. AQUATEC SITE REPRESENTATIVE ALONG WITH INSTALLATION CONTRACTOR TO CHECK AND CONFIRM THIS PRIOR TO LOWERING THE COVER SLAB INTO POSITION.
3. OVERHANG LOAD MUST BEAR ON BACKFILLED GROUND WHEN INSTALLING ONTO FINAL RING SEGMENT.

PERIMETER:
PLACE COMPACTED BACKFILL UP TO FINISHED NATURAL SURFACE LEVEL AROUND ITS PERIMETER.
MAINTAIN GOOD TRANSITION BETWEEN ORIGINAL SURFACES AND THE NEW.

COMPACTION:
COMPACTION AROUND PUMP STATION SITE IS TO BE HOLD POINT & SHALL BE IN ACCORDANCE WITH AS1289.5 AND QUALIFIED GEOTECHNICAL ENGINEER SHALL BE ON SITE DURING COMPACTION FOR SUPERVISION & CERTIFICATION IN ACCORDANCE WITH REQUIREMENTS & RECOMMENDATIONS SPECIFIED BY SITE SPECIFIC GEOTECHNICAL ENGINEERS.

GEOTEXTILE AND/OR GEOGRID REINFORCEMENT:
INSTALL GEOTEXTILE / GEOGRID REINFORCEMENT OR SUITABLE MEASURES AGAINST SETTLEMENT AND OTHER ADVERSITIES IN ACCORDANCE WITH SITE SPECIFIC GEOTECHNICAL ENGINEER'S REQUIREMENTS & RECOMMENDATIONS

EXCAVATION REQUIREMENTS:
EXCAVATION SUPPORT (I.E. BATTER SLOPES, SHIELD SUPPORT / SHORING BOX ETC.) TO BE DESIGNED AND CONSTRUCTED BY CIVIL CONTRACTORS IN ACCORDANCE WITH SITE SPECIFIC GEOTECHNICAL ENGINEER'S REQUIREMENTS & RECOMMENDATIONS

TESTING AND INSPECTION:
TESTING & INSPECTION IS TO BE **HOLD POINT** AND TO BE IN ACCORDANCE WITH THE MINIMUM FIELD DENSITY TESTING FREQUENCY/EXTENT, LEVEL OF SUPERVISION REQUIREMENTS ETC. SPECIFIED BY THE SITE SPECIFIC GEOTECHNICAL ENGINEERS PRIOR TO THE COMMENCEMENT OF CONSTRUCTION. INSPECTION OF THE CIVIL CONTRACTOR SITE WORKS AND METHOD OF INSTALLATION MUST BE PERFORMED BY A QUALIFIED GEOTECHNICAL ENGINEER TO VERIFY THE STANDARDS REQUIREMENTS HAVE BEEN MET.

SITE SPECIFIC RECOMMENDATION:
1. GEOTECHNICAL SUPERVISION DURING CONSTRUCTION IS RECOMMENDED TO ASSIST THE CONSTRUCTION AND EVALUATE THE EXCAVATION STABILITY. CONTRACTORS TO LIAISE WITH SITE SPECIFIC GEOTECHNICAL ENGINEERS FOR TESTING REQUIREMENTS (I.E FIELD DENSITY TESTING FREQUENCY/EXTENT) & INSPECTION REQUIREMENTS (I.E. LEVEL OF SUPERVISION), AND TO BE IN ACCORDANCE WITH SITE SPECIFIC GEOTECHNICAL ENGINEERS ADVISE.
2. CONTRACTORS TO ADHERE TO ANY EARTHWORK, EXCAVATION, BACKFILL, CONSTRUCTION, SITE SPECIFIC TREATMENT REQUIREMENTS/RECOMMENDATIONS SPECIFIED BY SITE SPECIFIC GEOTECHNICAL ENGINEERS (I.E. DRAINAGE MEASURES, DE-WATERING MEASURES, GEOTEXTILE/GEOGRID REINFORCEMENT MEASURES AGAINST SETTLEMENT, EXCAVATION SUPPORT REQUIREMENTS, EROSION & SEDIMENT CONTROL MEASURES, MOISTURE CONTROL MEASURES, TREE REMOVAL/PLANTATION MEASURES, ROOT TREATMENTS, ACID SULFATE SOIL MANAGEMENT MEASURES).
3. CONTRACTORS TO ENSURE BEARING CAPACITY > 100 KPA IS AVAILABLE AT FOUNDATIONS.
4. CONTRACTORS TO REMOVE ANY EXISTING SOIL (I.E FILL, TOPSOIL, DISTURBED/WEAKENED SOILS, ORGANIC/DELETERIOUS/PERISHABLEMATTER) FROM THE PUMP STATION SITE, SPECIFIED BY SITE SPECIFIC GEOTECHNICAL ENGINEERS AS NOT RECOMMENDED/SUITABLE FOR STRUCTURAL FILL.
5. CONTRACTORS TO TAKE NECESSARY PRECAUTIONS/ TREATMENTS TO PREVENT ANY STRUCTURAL DAMAGES TO THE PUMP STATION STRUCTURES & PIPEWORK DUE TO ANY ADVERSE SITE SOIL CONDITIONS (I.E. FILL, CONTAMINATED/ REACTIVE/ SOFT/ COLLAPSING/DISPERSIVE/ FISSURED SOILS, SETTLEMENTS, ABNORMAL MOISTURE CONDITIONS, TREES/ROOTS, ACID SULFATE SOIL)
6. CONTRACTOR TO INVESTIGATE IF THERE ARE ANY UNDERGROUND SERVICES PRIOR TO COMMENCEMENT OF EXCAVATIONS.
7. DURING CONSTRUCTION THE CONTRACTOR SHALL BE RESPONSIBLE FOR MAINTAINING THE STRUCTURE IN A STABLE CONDITION AND ENSURING NO PART SHALL BE OVERSTRESSED UNDER CONSTRUCTION ACTIVITIES.
8. ALL EARTHWORKS SHALL BE CARRIED OUT IN ACCORDANCE WITH AS 3798-2007
9. CONTRACTOR TO GAIN SITE SPECIFIC GEOTECHNICAL ENGINEER'S DIRECTION THAT THE PROPOSED BACKFILL DETAILED ON THIS DRAWING IS APPROPRIATE FOR EXISTING SITE/SOIL AND ON-SITE LOADING CONDITIONS PRIOR TO COMMENCING CONSTRUCTION **(HOLD POINT)**

CIVIL CONTRACTOR SCOPE OF WORKS | AQUATEC SCOPE OF WORKS

REV	REVISION DETAILS	DRN	CKD	APP	DATE	REF. NUMBER	REFERENCE DOCUMENT
1	ISSUED FOR CONSTRUCTION	CV	NP		19/12/23	19855-80104	SPS BUOYANCY CALCULATION

Aquatec Fluid Systems Pty Ltd
www.aquatecenviro.com
ABN - 94 114 944 026
2 Provincial Crescent, Shepparton VIC 3630
T 1300 088 555 / E info@aquatecenviro.com

© *Copyright* - This drawing and design must not be copied in whole or in part without the written consent of Aquatec Environmental Group Pty Ltd.

Any literary or artistic works contained in this document are copyright Aquatec Environmental Group Pty Ltd ACN 112 325 434 (Aquatec Fluid Systems). Any information in this document, except information also available in publically available sources, is confidential to Aquatec. Reproduction of this document or part of it, or disclosure of the information contained in it, is not permitted without the written consent of Aquatec.

AQUATEC

Drawn	RS
Checked	JS
Approved	
Scale	AS SHOWN

This Drawing must not be used for Construction unless signed as Approved

Original Size A1

Client: ISLAND PLUMBING & GAS
Project: NORFOLK ISLAND MAIN SPS
JOB: SEWER PUMP STATION
Title: BACKFILL DETAILS (SPS 4)

OP19855	ISSUED FOR CONSTRUCTION (IFC01)	19855-20401	1
Project Number	Customer Submission Status	Drawing Number	Revision

Plot Date: 19/12/2023 Plotted by: Conrado Viray Cad File No: C:\Users\cviray\Documents\OP19855 Norfolk Island\Wip\OP19855 NORFOLK ISLAND SPS IFC01.dwg

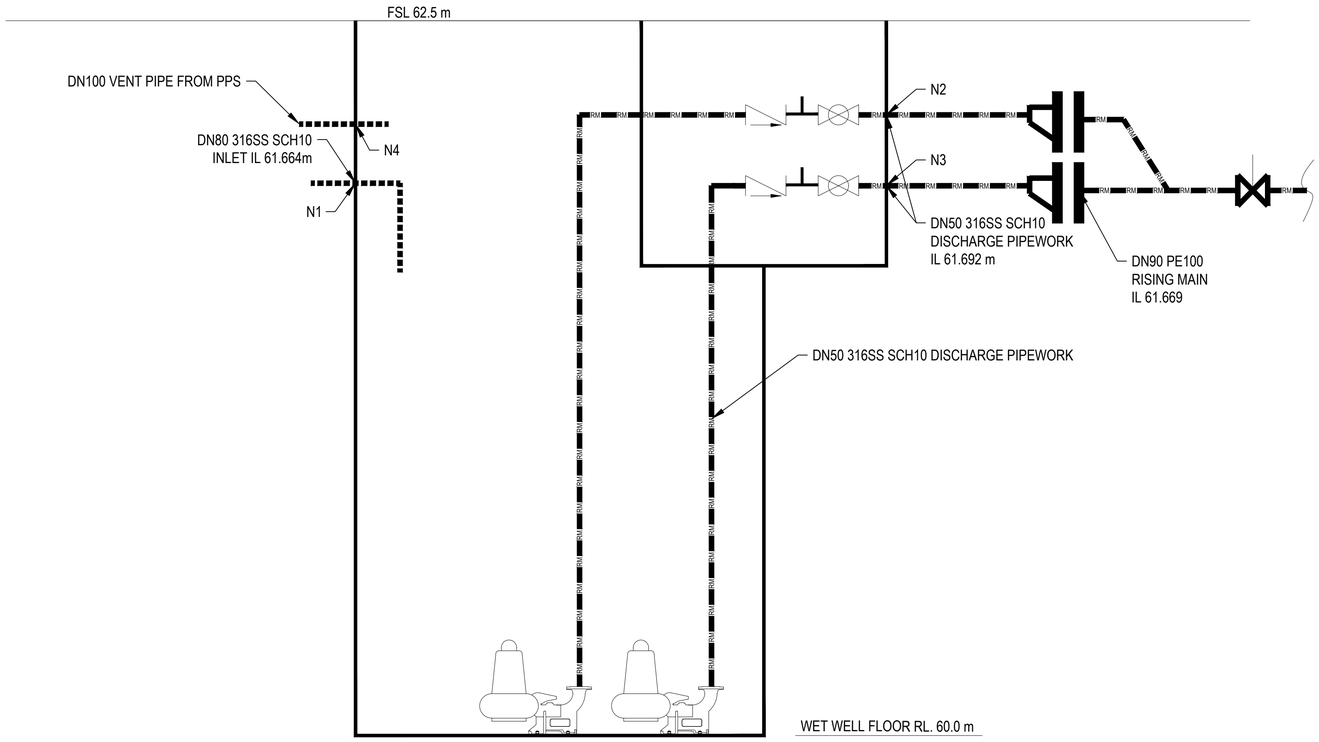

HYDRAULIC SCHEMATIC DIAGRAM

SCALE: NTS

CIVIL CONTRACTOR SCOPE OF WORKS | AQUATEC SCOPE OF WORKS

REV	REVISION DETAILS	DRN	CKD	APP	DATE	REF. NUMBER	REFERENCE DOCUMENT
1	ISSUED FOR CONSTRUCTION	CV	NP		19/12/23		

Aquatec Fluid Systems Pty Ltd
www.aquatecenviro.com
ABN - 94 114 944 026
2 Provincial Crescent, Shepparton VIC 3630
T 1300 088 555 / E info@aquatecenviro.com

© ***Copyright*** - This drawing and design must not be copied in whole or in part without the written consent of Aquatec Environmental Group Pty Ltd.

Any literary or artistic works contained in this document are copyright Aquatec Environmental Group Pty Ltd ACN 112 325 434 (Aquatec Fluid Systems). Any information in this document, except information also available in publically available sources, is confidential to Aquatec. Reproduction of this document or part of it, or disclosure of the information contained in it, is not permitted without the written consent of Aquatec.

AQUATEC

Drawn	RS
Checked	JS
Approved	
Scale	AS SHOWN

This Drawing must not be used for Construction unless signed as Approved

Original Size A1

Client	ISLAND PLUMBING & GAS
Project	NORFOLK ISLAND MAIN SPS
JOB	SEWER PUMP STATION
Title	HYDRAULIC SCHEMATIC DIAGRAM (SPS 5)

OP19855	ISSUED FOR CONSTRUCTION (IFC01)	19855-40501	1
Project Number	Customer Submission Status	Drawing Number	Revision

Plot Date: 19/12/2023 Plotted by: Conrado Viray Cad File No: C:\Users\cviray\Documents\OP19855 Norfolk Island\Wip\OP19855 NORFOLK ISLAND SPS IFC01.dwg

NON-TRAFFICABLE INSTALLATION

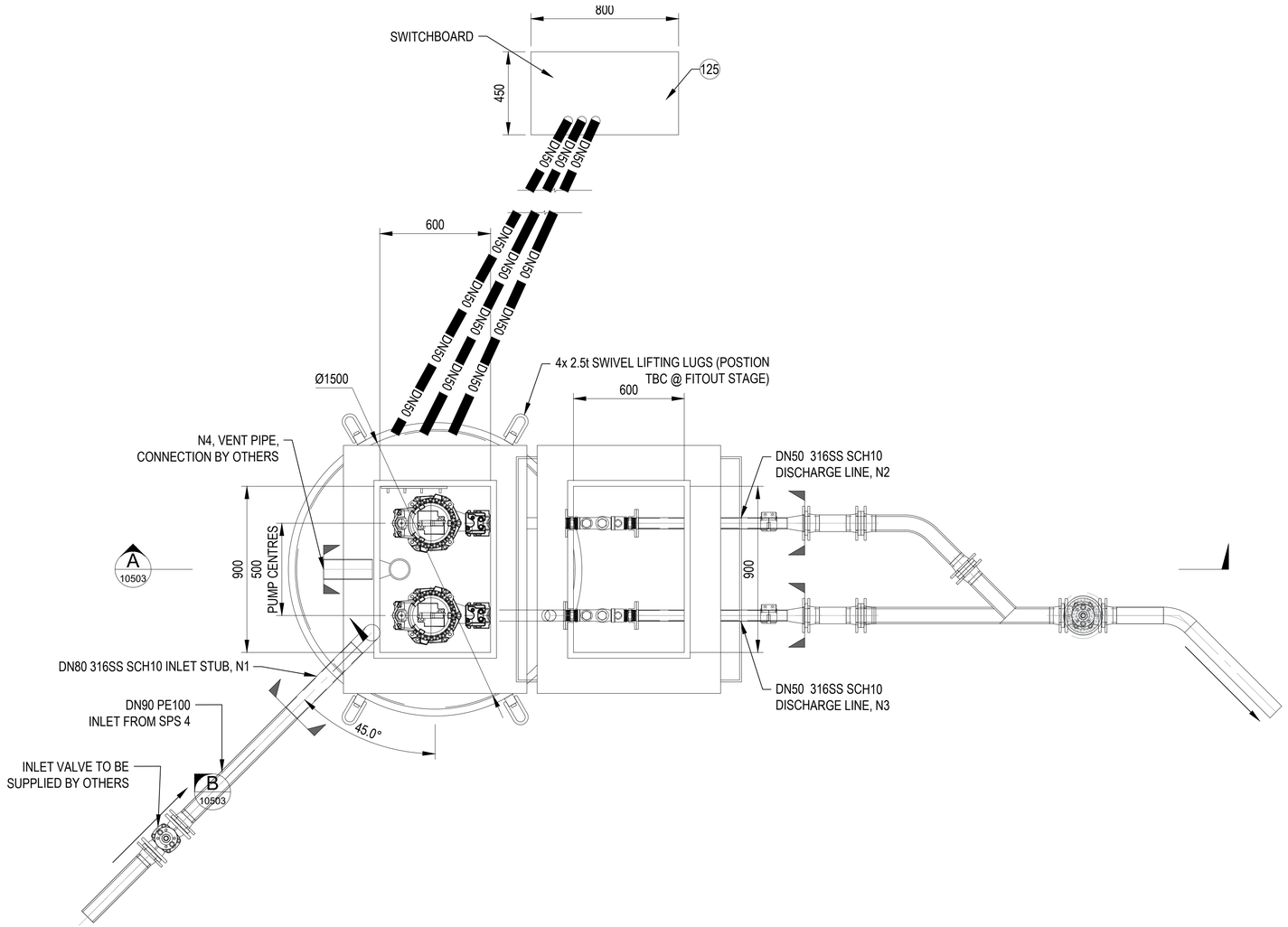

GENERAL NOTES:

1. PUMP STATION TO BE AQUATEC MODEL: AFPS20/3500IV/OP19855
2. ALL FRP PENETRATIONS TO EB GLASSED INTO THE FRP VESSEL.
3. REINFORCEMENT TO COMPLY WITH AS4671.
4. ALL HOLES TO BE PRE CORED AND GLASSED.
5. ALL FLANGES TO BE DRILLED TO AS4087 PN16 UNO (FLANGE DRILLING TO BE SAME AS TABLE D FLANGE)
6. FRP PIPE PENETRATION & 316SS FIXINGS TO THE FRP WALL TO BE PERFORMED IN ACCORDANCE WITH AS2634
7. ELECTRICAL SWITCHBOARD DOORS TO HAVE MIN. 600mm CLEARANCE TO ANY SURROUNDING ABOVE GROUND STRUCTURE AS PER AS3000

PUMP DETAILS	
PUMP MAKE	XYLEM
PUMP MODEL	FLYGT MP3127
PUMP WEIGHT	98 KG
MOTOR SIZE	7.4 kW
IMPELLER TYPE / SIZE	194 mm
IMPELLER MATERIAL	GREY CAST IRON
PUMP OPERATION	DUTY / STAND-BY
PUMP CONTROL	VSD

PUMPING STATION DETAILS	
FINISHED SURFACE LEVEL RL	62.5 m
DISCHARGE PIPE IL (@ VC)	61.692 m
SEWER INLET PIPE DIAMETER	DN 80
SEWER INLET PIPE IL	61.664 m
WET WELL FLOOR RL	60.0 m

PLAN

SCALE 1:25

0 500 1000 1500 2000 2500mm

SCALE 1:25 mm

CIVIL CONTRACTOR SCOPE OF WORKS | AQUATEC SCOPE OF WORKS

REV	REVISION DETAILS	DRN	CKD	APP	DATE	REF. NUMBER	REFERENCE DOCUMENT
1	ISSUED FOR CONSTRUCTION	CV	NP		19/12/23		

Aquatec Fluid Systems Pty Ltd
www.aquatecenviro.com
ABN - 94 114 944 026
2 Provincial Crescent, Shepparton VIC 3630
T 1300 088 555 / E info@aquatecenviro.com

© Copyright - This drawing and design must not be copied in whole or in part without the written consent of Aquatec Environmental Group Pty Ltd.

Any literary or artistic works contained in this document are copyright Aquatec Environmental Group Pty Ltd ACN 112 325 434 (Aquatec Fluid Systems). Any information in this document, except information also available in publically available sources, is confidential to Aquatec. Reproduction of this document or part of it, or disclosure of the information contained in it, is not permitted without the written consent of Aquatec.

AQUATEC

Drawn	RS
Checked	JS
Approved	
Scale	AS SHOWN
This Drawing must not be used for Construction unless signed as Approved	Original Size A1

Client: ISLAND PLUMBING & GAS
Project: NORFOLK ISLAND MAIN SPS
JOB: SEWER PUMP STATION
Title: SPS - PLAN (SPS 5)

OP19855	ISSUED FOR CONSTRUCTION (IFC01)	19855 - 10502	1
Project Number	Customer Submission Status	Drawing Number	Revision

Plot Date: 19/12/2023 Plotted by: Conrado Viray Cad File No: C:\Users\cviray\Documents\OP19855 Norfolk Island\Wip\OP19855 NORFOLK ISLAND SPS IFC01.dwg

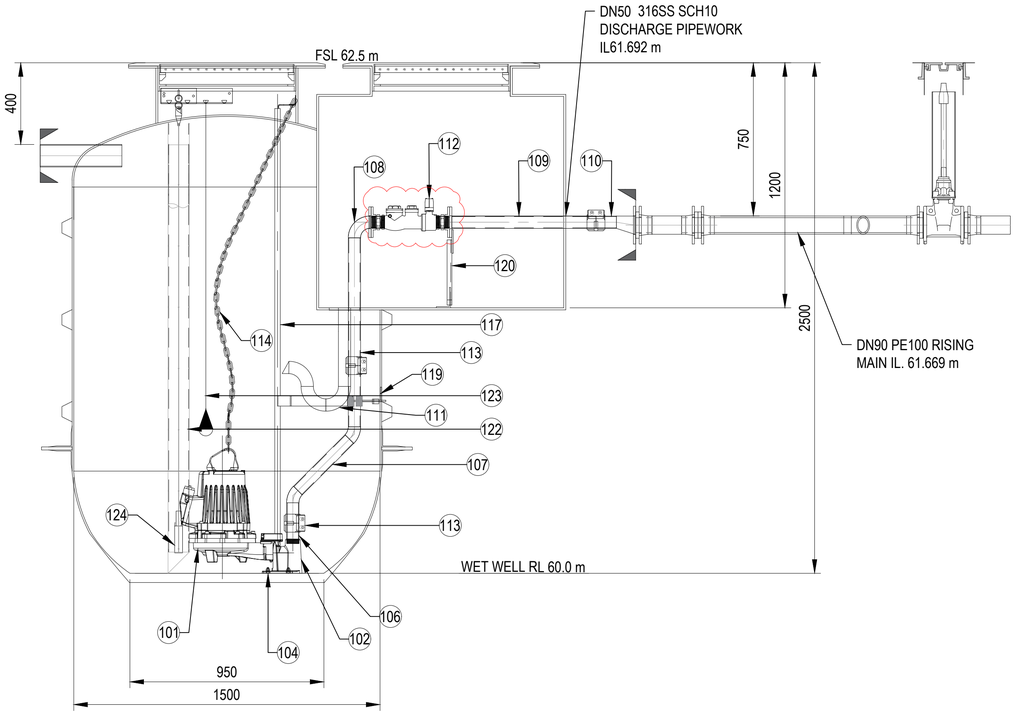

SECTION A
SCALE 1:15 10502

0 300 600 900 1200 1500mm
SCALE 1:15 mm

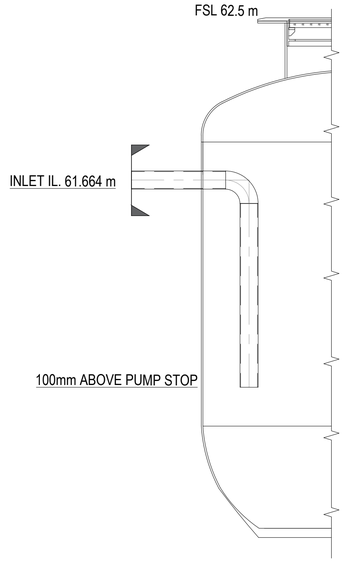

SECTION B
SCALE 1:15 10502

0 300 600 900 1200 1500mm
SCALE 1:15 mm

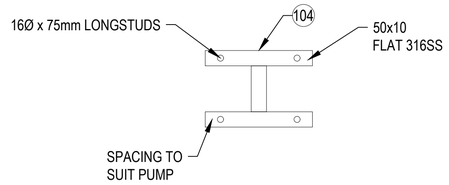

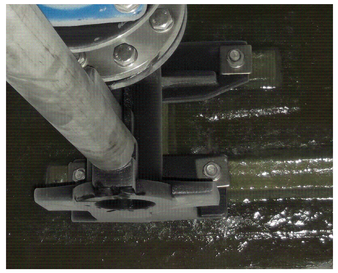

DETAIL 1
SCALE 1:10 10503

0 200 400 600 800 1000mm
SCALE 1:10 mm

0 300 600 900 1200 1500mm
SCALE 1:15 mm

CIVIL CONTRACTOR SCOPE OF WORKS | AQUATEC SCOPE OF WORKS

REV	REVISION DETAILS	DRN	CKD	APP	DATE	REF. NUMBER	REFERENCE DOCUMENT
1	ISSUED FOR CONSTRUCTION	CV	NP		19/12/23		

Aquatec Fluid Systems Pty Ltd
www.aquatecenviro.com
ABN - 94 114 944 026
2 Provincial Crescent, Shepparton VIC 3630
T 1300 088 555 / E info@aquatecenviro.com

© Copyright - This drawing and design must not be copied in whole or in part without the written consent of Aquatec Environmental Group Pty Ltd.

Any literary or artistic works contained in this document are copyright Aquatec Environmental Group Pty Ltd ACN 112 325 434 (Aquatec Fluid Systems). Any information in this document, except information also available in publically available sources, is confidential to Aquatec. Reproduction of this document or part of it, or disclosure of the information contained in it, is not permitted without the written consent of Aquatec.

AQUATEC

Drawn	RS
Checked	JS
Approved	
Scale	AS SHOWN
This Drawing must not be used for Construction unless signed as Approved	Original Size A1

Client	ISLAND PLUMBING & GAS
Project	NORFOLK ISLAND MAIN SPS
JOB	SEWER PUMP STATION
Title	SPS - SECTION (SPS 5)

OP19855	ISSUED FOR CONSTRUCTION (IFC01)	19855 - 10503	1
Project Number	Customer Submission Status	Drawing Number	Revision

Plot Date: 19/12/2023 Plotted by: Conrado Viray Cad File No: C:\Users\cviray\Documents\OP19855 Norfolk Island\Wip\OP19855 NORFOLK ISLAND SPS IFC01.dwg

SPS - BILL OF MATERIALS

MATERIAL SCHEDULE

ITEM NUMBER	DESCRIPTION	QUANTITY	MATERIAL	REMARKS
101	SUBMERSIBLE PUMP	2	CAST IRON	REFER PUMP DETAILS IN DRAWING 10502
102	PUMP PEDESTAL, DN50	2	CAST IRON	XYLEM, BSP CONNECTION
103	UPPER GUIDE RAIL BRACKETS	2	CAST IRON	XYLEM
104	PUMP BASE	2	316SS	
105	DN80 INLET PIPE ASSEMBLY: 1 QTY X DN80 90 DEG BEND 2 QTY X DN80 STRAIGHT PIPE	1	316SS SCH 10	
106	DN50 BSP-SP PIPEWORK	2	316 SS SCH 10	LENGTH TO SUIT
107	DN50 SP-SP PIPEWORK, COMPRISING OF: 2 QTY X DN50 45 DEG BEND 3 QTY X DN50 STRAIGHT PIPE	2	316SS SCH 10	LENGTH TO SUIT
108	DN50 SP-FL PIPEWORK, COMPRISING OF: 1 QTY X DN50 90 DEG BEND 1 QTY X DN50 STRAIGHT PIPE 1 QTY X DN50 FLANGE	2	316SS SCH 10	LENGTH TO SUIT
109	DN50 FL-SP PIPEWORK, COMPRISING OF: 1 QTY X DN50 FLANGE 1 QTY X STRAIGHT PIPE	5	316SS SCH 10	
110	DN80-DN50 FL-SP PIPEWORK, COMPRISING OF: 1 QTY X DN50 FLANGE 1 QTY X STRAIGHT PIPE 1 QTY X ECCENTRIC REDUCER	2	316 SS SCH 10	
111	DN50 DRAIN, COMPRISING OF: 1 QTY x FROG FLAP VALVE 4 QTY x 90 DEG. M/F ELBOWS 1 QTY x PIPE	2	PVC SN8 MIN.	
112	DN50 BOUNDARY KIT ASSEMBLY, COMPRISING OF 1 QTY X BOUNDARY KIT 2 QTY X HEX NIPPLE 2 QTY X BSP FLANGE AS4087	2	316SS	
113	DN50 GRIP-E COUPLING	6	STAINLESS STEEL	NORMA
114	6mm PUMP CHAINS, GR60, LOAD RATED 1 m SPACING W MASTER LINK EITHER ENDS & BOW SHACKLE	2	316SS	
115	CHAIN HOOKS	2	316SS	AQT PN 504501
116	FLOAT HOOK	1	316SS	AQT PN 627534
117	PUMP GUIDERAILS, 2"	2	316SS SCH 10	LENGTH TO SUIT
119	DN50 PIPE SUPPORT CLAMP TYPE TWIN LEG PIPE SUPPORT BRACKETS WITH ANTISPREAD GUIDERAIL BRACKET	2	316SS	REFER AQUATEC STD DWG AQSTD-00001 DETAIL 02
120	DN50 PIPE SUPPORT TWIN LEG PIPE SUPPORT BRACKETS	2	316SS	REFER AQUATEC STD DWG AQSTD-00001 DETAIL 04
121	1-PART ACCESS COVER WITH THE FOLLOWING 3 SIDED PROTECTION CLEAR OPENING 900X600 FLUSH MOUNTED WITH LOW PROFILE HINGES RUBBER SEAL UNDER LIDS , GAS TIGHT CONCEALED LOCK BOXES WITH STD KEY ENTRY REMOVABLE HINGED SAFETY GRATES & EASY LIFT HANDLES	1	ALUMINIUM	AUSTRAL TSP1068
122	STILLING TUBE, ABS, DN100, c/w BRACKETS	1	ABS	LENGTH TO SUIT,
123	FLOAT, LEVEL CONTROL	1	EPDM RUBBER	
124	LEVEL TRANSDUCER	1	-	AQUATEC
125	SWITCHBOARD	1	ALUMINIUM	REFER ELECTRICAL DRAWING SET.

REV	REVISION DETAILS	DRN	CKD	APP	DATE	REF. NUMBER	REFERENCE DOCUMENT
1	ISSUED FOR CONSTRUCTION	CV	NP		19/12/23		

Aquatec Fluid Systems Pty Ltd
www.aquatecenviro.com
ABN - 94 114 944 026
2 Provincial Crescent, Shepparton VIC 3630
T 1300 088 555 / E info@aquatecenviro.com

© ***Copyright*** - This drawing and design must not be copied in whole or in part without the written consent of Aquatec Environmental Group Pty Ltd.

Any literary or artistic works contained in this document are copyright Aquatec Environmental Group Pty Ltd ACN 112 325 434 (Aquatec Fluid Systems). Any information in this document, except information also available in publically available sources, is confidential to Aquatec. Reproduction of this document or part of it, or disclosure of the information contained in it, is not permitted without the written consent of Aquatec.

AQUATEC

Drawn	RS
Checked	JS
Approved	
Scale	AS SHOWN
This Drawing must not be used for Construction unless signed as Approved	Original Size A1

Client	ISLAND PLUMBING & GAS
Project	NORFOLK ISLAND MAIN SPS
JOB	SEWER PUMP STATION
Title	SPS - BILL OF MATERIALS (SPS 5)

OP19855	ISSUED FOR CONSTRUCTION (IFC01)	19855 - 10505	1
Project Number	Customer Submission Status	Drawing Number	Revision

Plot Date: 19/12/2023 Plotted by: Conrado Viray Cad File No: C:\Users\cviray\Documents\OP19855 Norfolk Island\Wip\OP19855 NORFOLK ISLAND SPS IFC01.dwg

NON-TRAFFICABLE INSTALLATION

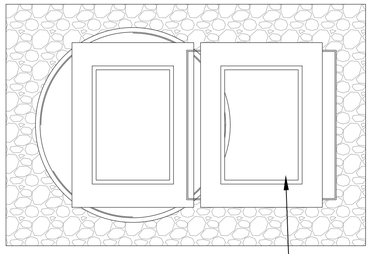

A
20501

MIN. ALLOWABLE SOIL BEARING CAPACITY UNDERSIDE OF THE REINFORCED CONCRETE SLABS TO BE 100kPA OR AS PER ENGINEER'S REQUIREMENT

FOUNDATION SHALL BE INSPECTED BY AN EXPERIENCED GEO-TECHNICAL ENGINEER TO CONFIRM MINIMUM BEARING REQUIRED AND THERE IS NO RISK OF SETTLEMENT

SPS BACKFILL- PLAN

SCALE 1:25

0 500 1000 1500 2000 2500mm

SCALE 1:25 mm

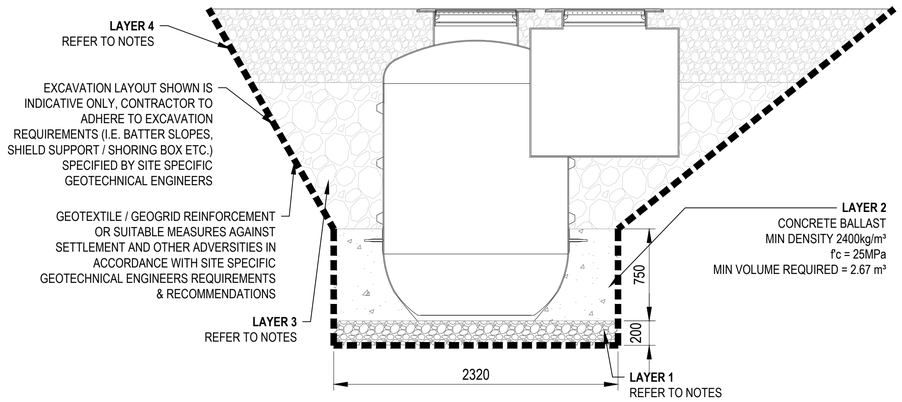

NOTE:
THE BALLAST CONCRETE HEIGHT NEED TO BE MIN. 150mm HIGH ABOE LOWEST RIB (BUOYANCY ANCHOR RIB)

SECTION A

SCALE 1:25 20501

0 500 1000 1500 2000 2500mm

SCALE 1:25 mm

CONSTRUCTION NOTES AND BACKFILLING REQUIREMENTS

CONSTRUCTION NOTES AND BACKFILLING REQUIREMENTS FOR PUMP STATION INSTALLATION (GRAVITY SEWER / RISING MAIN TRENCH FILLING, PIPE EMBEDMENT AND ANY OTHER BACKFILL / BULK EARTHWORKS OUTSIDE THE PUMP STATION INSTALLATION TO BE DESIGNED & CONSTRUCTED BY CIVIL CONTRACTORS)

OCCUPATIONAL HEALTH AND SAFETY:
THE CONTRACTOR IS RESPONSIBLE TO BE KNOWLEDGEABLE OF AND IS BOUND BY THE OH&S STATUTORY REQUIREMENTS PERTAINING TO WORK IN DEEP TRENCHES AND SHAFTS.

THE WATER AUTHORITY:
THE SPECIFICATIONS OF THE RELEVANT PRINCIPLE WATER AUTHORITY FOR THE INSTALLATION AND CONSTRUCTION OF PUMP STATION ARE TO BE ADHERED TO IN ADDITION TO THESE CONSTRUCTION RECOMMENDATIONS.

SITE INVESTIGATION:
CONTRACTORS TO LIAISE WITH THEIR GEOTECHNICAL/CONSULTING ENGINEER TO CONDUCT A SITE/GEOTECHNICAL INVESTIGATION TO ESTABLISH INDICATIVE SUBSURFACE CONDITIONS PRIOR TO THE COMMENCEMENT OF CONSTRUCTION.

BACKFILL DESIGN ASSUMPTIONS & NOTES:
1. BACKFILL DETAILED ON THIS DRAWING ARE BASED ON NORMAL SITE CONDITION.
2. GROUNDWATER LEVEL IS ASSUMED AT FSL FOR STRUCTURAL DESIGN & BUOYANCY / FLOATATION STABILITY CALCULATIONS.

LAYER 1 - FOUNDATION:
FOUNDATION MATERIAL - 20mm CLASS 2 CRUSHED ROCK (NATURAL GRAVEL OR QUARRIED MATERIALS). COMPACTION OF 98% MAXIMUM DRY DENSITY (STD) IN ACCORDANCE WITH AS1289.5.1.
ALTERNATIVELY, GRADE N20 MASS CONCRETE MAY BE CAST AS A SUB BASE WITH 50MM LAYER OF COMPACTED DRAINAGE AGGREGATE BEDDING TO ACHIEVE THE FINISHED PREPARED BASE LEVEL

1. EXCAVATION DEPTH IS TO BE A MINIMUM OF 200MM BELOW BASE OF CASTING AND MAY BE DEEPER AS REQUIRED (OR POURING ADDITIONAL BLINDING) TO ACHIEVE A MINIMUM FOUNDATION BEARING CAPACITY OF 100KPA, FOUNDATION SHALL BE INSPECTED BY AN EXPERIENCED GEO-TECHNICAL ENGINEER TO CONFIRM MINIMUM BEARING REQUIRED AND THERE IS NO RISK OF SETTLEMENT, **(HOLD POINT);**
2. WHERE OVER EXCAVATION HAS OCCURRED BELOW THE PITS, SUCH OVER EXCAVATION SHALL BE FILLED WITH ABOVE MENTIONED FOUNDATION MATERIAL TO THE ENGINEER'S SATISFACTION;
3. DO NOT SLUICE OR FLOOD THE BACKFILL INTO PLACE;
4. REMOVE OR STOCKPILE SPOIL AS REQUIRED;
5. BASE FOUNDATION SHALL BE INSPECTED BY AN EXPERIENCED GEO-TECHNICAL ENGINEER TO CONFIRM MINIMUM BEARING REQUIRED AND THERE IS NO RISK OF SETTLEMENT.

LAYER 2 - CONCRETE BALLAST
CONCRETE WITH MIN DENSITY = 2400kg/m³ AND MIN fc' = 25MPa
1. POUR CALCULATED VOLUME OF CONCRETE AS RETAINER BALLAST AROUND BASE OF UNIT TO RESIST BUOYANCY & MUST BE CONSTRUCTED TO THE DIMENSIONS SHOWN ON THE SECTION;
2. MIN 200MM CLEARANCE NEED TO BE PROVIDED BETWEEN PIPE / PIPE CONNECTIONS' EXTERNAL SURFACE AND CONCRETE BALLAST FOR THE PIPEWORK ENCROACHING CONCRETE BALLAST

LAYER 3 - BACKFILL:
BACKFILL MATERIAL - 20mm CLASS 4 CRUSHED ROCK (NATURAL GRAVEL OR QUARRIED MATERIALS).
1. COMPACTED TO MIN 95% RDD (STD) IN MAXIMUM LIFTS OF 200MM IN ACCORDANCE WITH AS1289.5.1. DO NOT SLUICE OR FLOOD THE BACKFILL INTO PLACE;
2. MIN DENSITY 1850 Kg/m3 (**HOLD POINT**);

LAYER 4 - BACKFILL:
BACKFILL MATERIAL - 20mm CLASS 2 CRUSHED ROCK (NATURAL GRAVEL OR QUARRIED MATERIALS).
1. COMPACTED TO MIN 98% MDD (STD) IN MAXIMUM LIFTS OF 200MM IN ACCORDANCE WITH AS1289.5.1. DO NOT SLUICE OR FLOOD THE BACKFILL INTO PLACE;
2. MIN DENSITY 1850 Kg/m3 (**HOLD POINT**);

MATERIAL SPECIFICATIONS:
NO BACKFILL PARTICLE SIZE GREATER 20MM AROUND OR SURROUNDING THE PITS IS ALLOWED. ALL CHOSEN MATERIALS SHALL BE IN ACCORDANCE WITH THE FOLLOWING, AS REQUIRED:
1. MRWA BACKFILL SPECIFICATION 04-03.2
2. VICROAD STANDARD 812
3. CONSULTING ENGINEERS SITE INVESTIGATION
4. WSAA PRODUCT SPECIFICATION & AS/NZS 2566.2

INTEGRAL VALVE CHAMBER INSTALLATION:
THE VALVE CHAMBER IS FULLY SELF SUPPORTING. TO SAFE GUARD AGAINST CAVITIES GETTING FORMED UNDERSIDE OF THE VALVE CHAMBER SEGMENT, BACK FILL AS FOLLOWS:
1. AFTER THE FINAL RING SECTION IS IN POSITION, PREPARE THE BACKFILL TO WITHIN 20MM OF THE TOP OUTER SEALING EDGE.
2. AQUATEC SITE REPRESENTATIVE ALONG WITH INSTALLATION CONTRACTOR TO CHECK AND ENSURE THAT THE BACKFILL IS SATISFACTORY.
3. LOWER THE VALVE CHAMBER INTO POSITION AND ENSURE AN EVEN SEAL UNDERNEATH RING SECTION

COVER SLAB INSTALLATION:
1. PREPARE THE COMPACTED GROUND TO THE TOP OF THE UPPERMOST WELL INCREMENT.
2. AQUATEC SITE REPRESENTATIVE ALONG WITH INSTALLATION CONTRACTOR TO CHECK AND CONFIRM THIS PRIOR TO LOWERING THE COVER SLAB INTO POSITION.
3. OVERHANG LOAD MUST BEAR ON BACKFILLED GROUND WHEN INSTALLING ONTO FINAL RING SEGMENT.

PERIMETER:
PLACE COMPACTED BACKFILL UP TO FINISHED NATURAL SURFACE LEVEL AROUND ITS PERIMETER.
MAINTAIN GOOD TRANSITION BETWEEN ORIGINAL SURFACES AND THE NEW.

COMPACTION:
COMPACTION AROUND PUMP STATION SITE IS TO BE HOLD POINT & SHALL BE IN ACCORDANCE WITH AS1289.5 AND QUALIFIED GEOTECHNICAL ENGINEER SHALL BE ON SITE DURING COMPACTION FOR SUPERVISION & CERTIFICATION IN ACCORDANCE WITH REQUIREMENTS & RECOMMENDATIONS SPECIFIED BY SITE SPECIFIC GEOTECHNICAL ENGINEERS.

GEOTEXTILE AND/OR GEOGRID REINFORCEMENT:
INSTALL GEOTEXTILE / GEOGRID REINFORCEMENT OR SUITABLE MEASURES AGAINST SETTLEMENT AND OTHER ADVERSITIES IN ACCORDANCE WITH SITE SPECIFIC GEOTECHNICAL ENGINEER'S REQUIREMENTS & RECOMMENDATIONS

EXCAVATION REQUIREMENTS:
EXCAVATION SUPPORT (I.E. BATTER SLOPES, SHIELD SUPPORT / SHORING BOX ETC.) TO BE DESIGNED AND CONSTRUCTED BY CIVIL CONTRACTORS IN ACCORDANCE WITH SITE SPECIFIC GEOTECHNICAL ENGINEER'S REQUIREMENTS & RECOMMENDATIONS

TESTING AND INSPECTION:
TESTING & INSPECTION IS TO BE **HOLD POINT** AND TO BE IN ACCORDANCE WITH THE MINIMUM FIELD DENSITY TESTING FREQUENCY/EXTENT, LEVEL OF SUPERVISION REQUIREMENTS ETC. SPECIFIED BY THE SITE SPECIFIC GEOTECHNICAL ENGINEERS PRIOR TO THE COMMENCEMENT OF CONSTRUCTION. INSPECTION OF THE CIVIL CONTRACTOR SITE WORKS AND METHOD OF INSTALLATION MUST BE PERFORMED BY A QUALIFIED GEOTECHNICAL ENGINEER TO VERIFY THE STANDARDS REQUIREMENTS HAVE BEEN MET.

SITE SPECIFIC RECOMMENDATION:
1. GEOTECHNICAL SUPERVISION DURING CONSTRUCTION IS RECOMMENDED TO ASSIST THE CONSTRUCTION AND EVALUATE THE EXCAVATION STABILITY. CONTRACTORS TO LIAISE WITH SITE SPECIFIC GEOTECHNICAL ENGINEERS FOR TESTING REQUIREMENTS (I.E FIELD DENSITY TESTING FREQUENCY/EXTENT) & INSPECTION REQUIREMENTS (I.E. LEVEL OF SUPERVISION), AND TO BE IN ACCORDANCE WITH SITE SPECIFIC GEOTECHNICAL ENGINEERS ADVISE.
2. CONTRACTORS TO ADHERE TO ANY EARTHWORK, EXCAVATION, BACKFILL, CONSTRUCTION, SITE SPECIFIC TREATMENT REQUIREMENTS/RECOMMENDATIONS SPECIFIED BY SITE SPECIFIC GEOTECHNICAL ENGINEERS (I.E. DRAINAGE MEASURES, DE-WATERING MEASURES, GEOTEXTILE/GEOGRID REINFORCEMENT MEASURES AGAINST SETTLEMENT, EXCAVATION SUPPORT REQUIREMENTS, EROSION & SEDIMENT CONTROL MEASURES, MOISTURE CONTROL MEASURES, TREE REMOVAL/PLANTATION MEASURES, ROOT TREATMENTS, ACID SULFATE SOIL MANAGEMENT MEASURES).
3. CONTRACTORS TO ENSURE BEARING CAPACITY > 100 KPA IS AVAILABLE AT FOUNDATIONS.
4. CONTRACTORS TO REMOVE ANY EXISTING SOIL (I.E FILL, TOPSOIL, DISTURBED/WEAKENED SOILS, ORGANIC/DELETERIOUS/PERISHABLEMATTER) FROM THE PUMP STATION SITE, SPECIFIED BY SITE SPECIFIC GEOTECHNICAL ENGINEERS AS NOT RECOMMENDED/SUITABLE FOR STRUCTURAL FILL.
5. CONTRACTORS TO TAKE NECESSARY PRECAUTIONS/ TREATMENTS TO PREVENT ANY STRUCTURAL DAMAGES TO THE PUMP STATION STRUCTURES & PIPEWORK DUE TO ANY ADVERSE SITE SOIL CONDITIONS (I.E. FILL, CONTAMINATED/ REACTIVE/ SOFT/ COLLAPSING/DISPERSIVE/ FISSURED SOILS, SETTLEMENTS, ABNORMAL MOISTURE CONDITIONS, TREES/ROOTS, ACID SULFATE SOIL)
6. CONTRACTOR TO INVESTIGATE IF THERE ARE ANY UNDERGROUND SERVICES PRIOR TO COMMENCEMENT OF EXCAVATIONS.
7. DURING CONSTRUCTION THE CONTRACTOR SHALL BE RESPONSIBLE FOR MAINTAINING THE STRUCTURE IN A STABLE CONDITION AND ENSURING NO PART SHALL BE OVERSTRESSED UNDER CONSTRUCTION ACTIVITIES.
8. ALL EARTHWORKS SHALL BE CARRIED OUT IN ACCORDANCE WITH AS 3798-2007
9. CONTRACTOR TO GAIN SITE SPECIFIC GEOTECHNICAL ENGINEER'S DIRECTION THAT THE PROPOSED BACKFILL DETAILED ON THIS DRAWING IS APPROPRIATE FOR EXISTING SITE/SOIL AND ON-SITE LOADING CONDITIONS PRIOR TO COMMENCING CONSTRUCTION **(HOLD POINT)**

CIVIL CONTRACTOR SCOPE OF WORKS | AQUATEC SCOPE OF WORKS

REV	REVISION DETAILS	DRN	CKD	APP	DATE	REF. NUMBER	REFERENCE DOCUMENT
1	ISSUED FOR CONSTRUCTION	CV	NP		19/12/23	19855-80105	SPS BUOYANCY CALCULATION

Aquatec Fluid Systems Pty Ltd
www.aquatecenviro.com
ABN - 94 114 944 026
2 Provincial Crescent, Shepparton VIC 3630
T 1300 088 555 / E info@aquatecenviro.com

© ***Copyright*** - This drawing and design must not be copied in whole or in part without the written consent of Aquatec Environmental Group Pty Ltd.

Any literary or artistic works contained in this document are copyright Aquatec Environmental Group Pty Ltd ACN 112 325 434 (Aquatec Fluid Systems). Any information in this document, except information also available in publically available sources, is confidential to Aquatec. Reproduction of this document or part of it, or disclosure of the information contained in it, is not permitted without the written consent of Aquatec.

AQUATEC

Drawn	RS
Checked	JS
Approved	
Scale	AS SHOWN

This Drawing must not be used for Construction unless signed as Approved

Original Size A1

Client: ISLAND PLUMBING & GAS
Project: NORFOLK ISLAND MAIN SPS
JOB: SEWER PUMP STATION
Title: BACKFILL DETAILS (SPS 5)

OP19855	ISSUED FOR CONSTRUCTION (IFC01)	19855-20501	1
Project Number	Customer Submission Status	Drawing Number	Revision

Plot Date: 19/12/2023 Plotted by: Conrado Viray Cad File No: C:\Users\cviray\Documents\OP19855 Norfolk Island\Wip\OP19855 NORFOLK ISLAND SPS IFC01.dwg

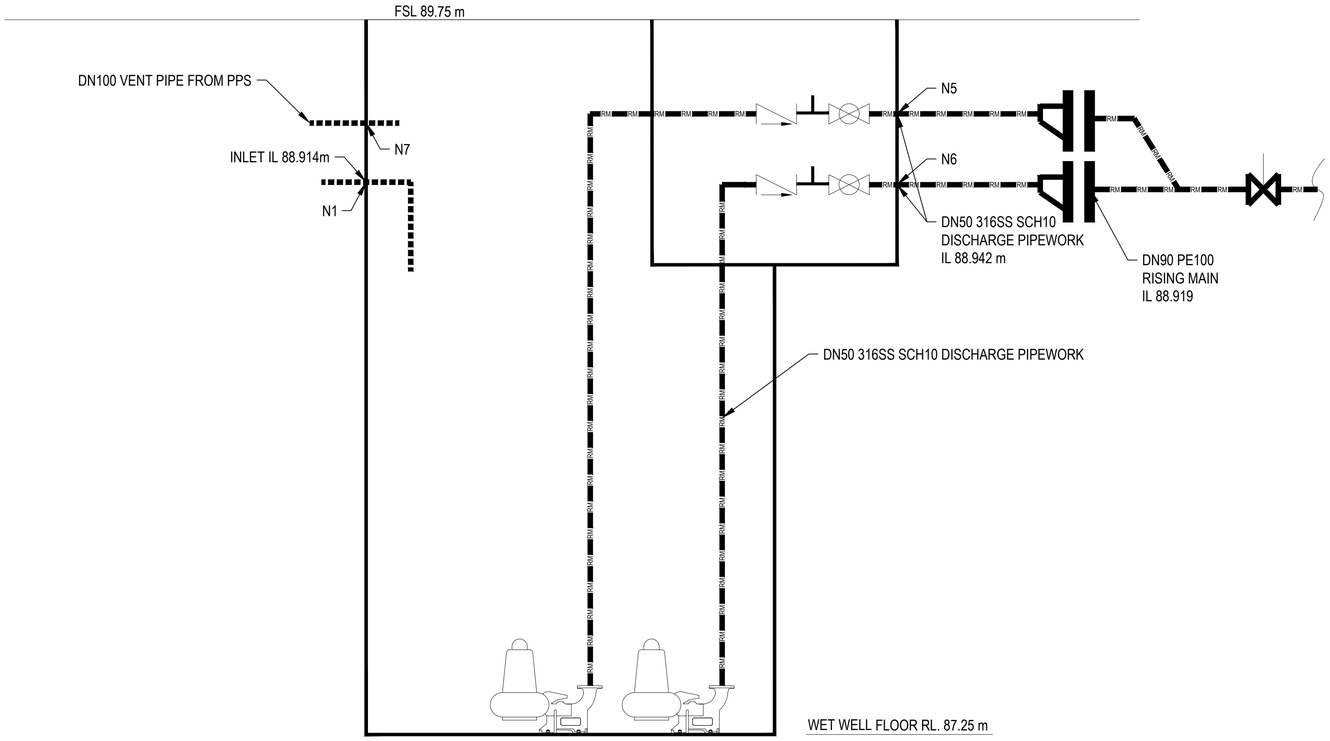

HYDRAULIC SCHEMATIC DIAGRAM

SCALE: NTS

CIVIL CONTRACTOR SCOPE OF WORKS | AQUATEC SCOPE OF WORKS

REV	REVISION DETAILS	DRN	CKD	APP	DATE	REF. NUMBER	REFERENCE DOCUMENT
1	ISSUED FOR CONSTRUCTION	CV	NP		19/12/23		

Aquatec Fluid Systems Pty Ltd
www.aquatecenviro.com
ABN - 94 114 944 026
2 Provincial Crescent, Shepparton VIC 3630
T 1300 088 555 / E info@aquatecenviro.com

© ***Copyright*** - This drawing and design must not be copied in whole or in part without the written consent of Aquatec Environmental Group Pty Ltd.

Any literary or artistic works contained in this document are copyright Aquatec Environmental Group Pty Ltd ACN 112 325 434 (Aquatec Fluid Systems). Any information in this document, except information also available in publically available sources, is confidential to Aquatec. Reproduction of this document or part of it, or disclosure of the information contained in it, is not permitted without the written consent of Aquatec.

AQUATEC

Drawn	RS
Checked	JS
Approved	
Scale	AS SHOWN

This Drawing must not be used for Construction unless signed as Approved

Original Size A1

Client	ISLAND PLUMBING & GAS
Project	NORFOLK ISLAND MAIN SPS
JOB	SEWER PUMP STATION
Title	HYDRAULIC SCHEMATIC DIAGRAM (SPS 6)

OP19855	ISSUED FOR CONSTRUCTION (IFC01)	19855-40501	1
Project Number	Customer Submission Status	Drawing Number	Revision

Plot Date: 19/12/2023 Plotted by: Conrado Viray Cad File No: C:\Users\cviray\Documents\OP19855 Norfolk Island\Wip\OP19855 NORFOLK ISLAND SPS IFC01.dwg

NON-TRAFFICABLE INSTALLATION

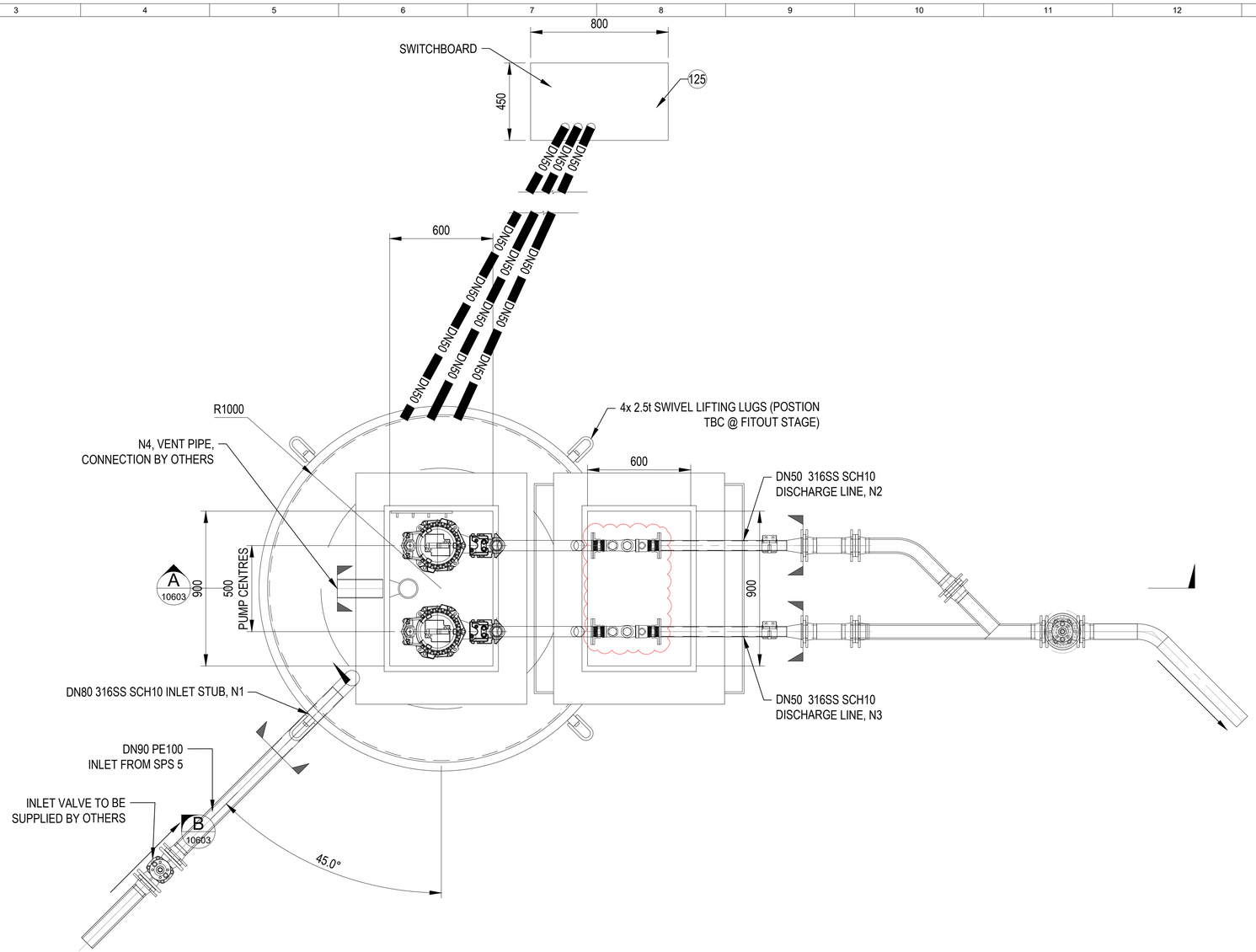

GENERAL NOTES:

1. PUMP STATION TO BE AQUATEC MODEL: AFPS20/3500IV/OP19855
2. ALL FRP PENETRATIONS TO EB GLASSED INTO THE FRP VESSEL.
3. REINFORCEMENT TO COMPLY WITH AS4671.
4. ALL HOLES TO BE PRE CORED AND GLASSED.
5. ALL FLANGES TO BE DRILLED TO AS4087 PN16 UNO (FLANGE DRILLING TO BE SAME AS TABLE D FLANGE)
6. FRP PIPE PENETRATION & 316SS FIXINGS TO THE FRP WALL TO BE PERFORMED IN ACCORDANCE WITH AS2634
7. ELECTRICAL SWITCHBOARD DOORS TO HAVE MIN. 600mm CLEARANCE TO ANY SURROUNDING ABOVE GROUND STRUCTURE AS PER AS3000

PUMP DETAILS	
PUMP MAKE	XYLEM
PUMP MODEL	FLYGT MP3127
PUMP WEIGHT	98 KG
MOTOR SIZE	7.4 kW
IMPELLER TYPE / SIZE	194 mm
IMPELLER MATERIAL	GREY CAST IRON
PUMP OPERATION	DUTY / STAND-BY
PUMP CONTROL	VSD

PUMPING STATION DETAILS	
FINISHED SURFACE LEVEL RL	89.75 m
DISCHARGE PIPE IL (@ VC)	88.942 m
SEWER INLET PIPE DIAMETER	DN 80
SEWER INLET PIPE IL	88.914 m
WET WELL FLOOR RL	87.25 m

PLAN

SCALE 1:25

0 500 1000 1500 2000 2500mm

SCALE 1:25 mm

CIVIL CONTRACTOR SCOPE OF WORKS | AQUATEC SCOPE OF WORKS

REV	REVISION DETAILS	DRN	CKD	APP	DATE	REF. NUMBER	REFERENCE DOCUMENT
1	ISSUED FOR CONSTRUCTION	CV	NP		19/12/23		

Aquatec Fluid Systems Pty Ltd
www.aquatecenviro.com
ABN - 94 114 944 026
2 Provincial Crescent, Shepparton VIC 3630
T 1300 088 555 / E info@aquatecenviro.com

© Copyright - This drawing and design must not be copied in whole or in part without the written consent of Aquatec Environmental Group Pty Ltd.

Any literary or artistic works contained in this document are copyright Aquatec Environmental Group Pty Ltd ACN 112 325 434 (Aquatec Fluid Systems). Any information in this document, except information also available in publically available sources, is confidential to Aquatec. Reproduction of this document or part of it, or disclosure of the information contained in it, is not permitted without the written consent of Aquatec.

AQUATEC

Drawn	RS
Checked	JS
Approved	
Scale	AS SHOWN
This Drawing must not be used for Construction unless signed as Approved	Original Size A1

Client: ISLAND PLUMBING & GAS
Project: NORFOLK ISLAND MAIN SPS
JOB: SEWER PUMP STATION
Title: SPS - PLAN (SPS 6)

OP19855	ISSUED FOR CONSTRUCTION (IFC01)	19855 - 10602	1
Project Number	Customer Submission Status	Drawing Number	Revision

Plot Date: 19/12/2023 Plotted by: Conrado Viray Cad File No: C:\Users\cviray\Documents\OP19855 Norfolk Island\Wip\OP19855 NORFOLK ISLAND SPS IFC01.dwg

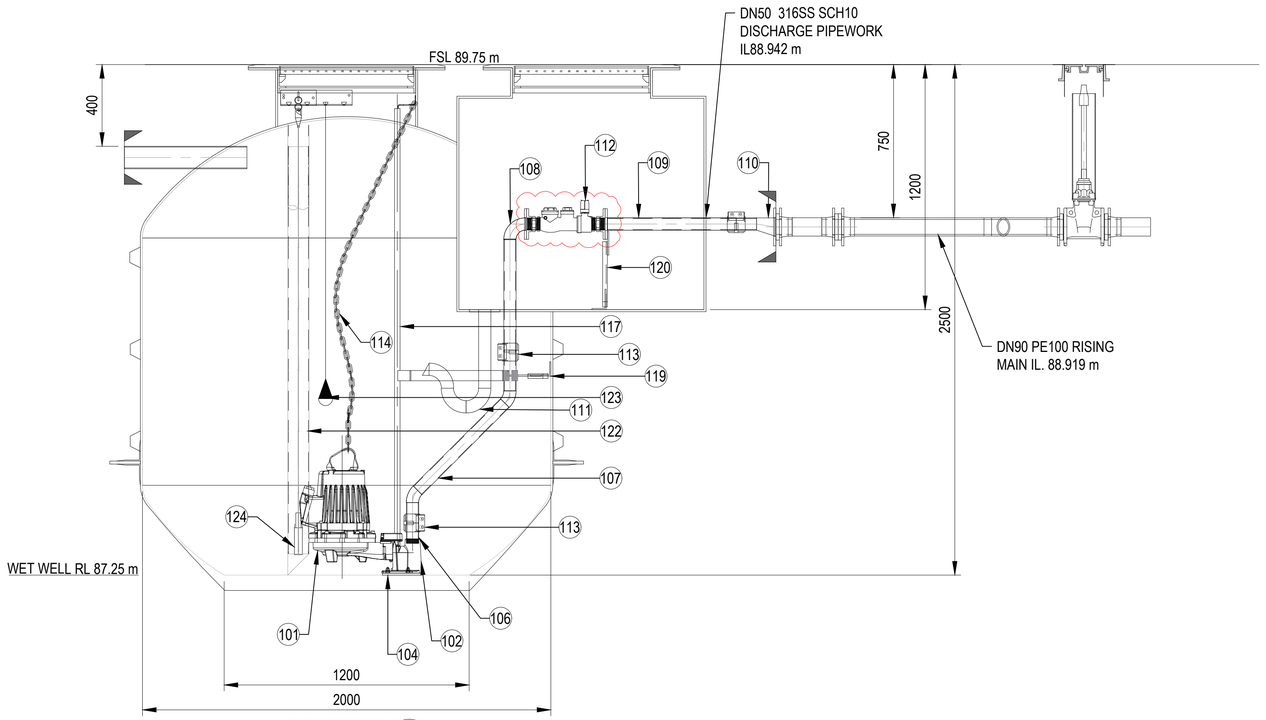

SECTION A
SCALE 1:15 10602

0 300 600 900 1200 1500mm
SCALE 1:15 mm

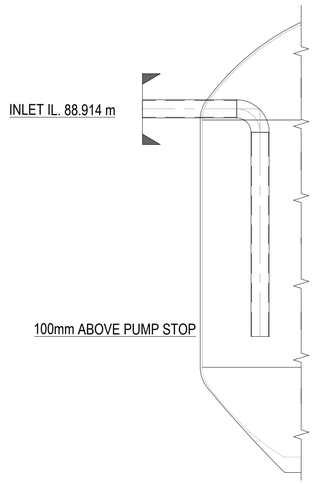

SECTION B
SCALE 1:15 10602

0 300 600 900 1200 1500mm
SCALE 1:15 mm

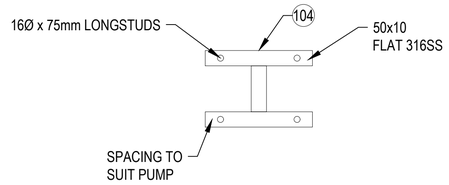

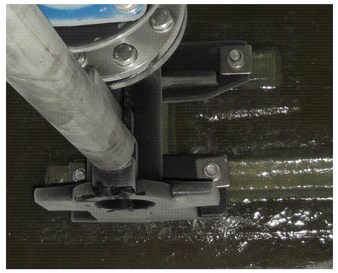

DETAIL 1
SCALE 1:10 10603

0 200 400 600 800 1000mm
SCALE 1:10 mm

CIVIL CONTRACTOR SCOPE OF WORKS | AQUATEC SCOPE OF WORKS

REV	REVISION DETAILS	DRN	CKD	APP	DATE	REF. NUMBER	REFERENCE DOCUMENT
1	ISSUED FOR CONSTRUCTION	CV	NP		19/12/23		

Aquatec Fluid Systems Pty Ltd
www.aquatecenviro.com
ABN - 94 114 944 026
2 Provincial Crescent, Shepparton VIC 3630
T 1300 088 555 / E info@aquatecenviro.com

© Copyright - This drawing and design must not be copied in whole or in part without the written consent of Aquatec Environmental Group Pty Ltd.

Any literary or artistic works contained in this document are copyright Aquatec Environmental Group Pty Ltd ACN 112 325 434 (Aquatec Fluid Systems). Any information in this document, except information also available in publically available sources, is confidential to Aquatec. Reproduction of this document or part of it, or disclosure of the information contained in it, is not permitted without the written consent of Aquatec.

AQUATEC

Drawn	RS
Checked	JS
Approved	
Scale	AS SHOWN

This Drawing must not be used for Construction unless signed as Approved

Original Size A1

Client: ISLAND PLUMBING & GAS
Project: NORFOLK ISLAND MAIN SPS
JOB: SEWER PUMP STATION
Title: SPS - SECTION (SPS 6)

OP19855	ISSUED FOR CONSTRUCTION (IFC01)	19855 - 10603	1
Project Number	Customer Submission Status	Drawing Number	Revision

Plot Date: 19/12/2023 Plotted by: Conrado Viray Cad File No: C:\Users\cviray\Documents\OP19855 Norfolk Island\Wip\OP19855 NORFOLK ISLAND SPS IFC01.dwg

SPS - BILL OF MATERIALS

MATERIAL SCHEDULE

ITEM NUMBER	DESCRIPTION	QUANTITY	MATERIAL	REMARKS
101	SUBMERSIBLE PUMP	2	CAST IRON	REFER PUMP DETAILS IN DRAWING 10602
102	PUMP PEDESTAL, DN50	2	CAST IRON	XYLEM, BSP CONNECTION
103	UPPER GUIDE RAIL BRACKETS	2	CAST IRON	XYLEM
104	PUMP BASE	2	316SS	
105	DN80 INLET PIPE ASSEMBLY: 1 QTY X DN80 90 DEG BEND 2 QTY X DN80 STRAIGHT PIPE	1	316SS SCH 10	
106	DN50 BSP-SP PIPEWORK	2	316 SS SCH 10	LENGTH TO SUIT
107	DN50 SP-SP PIPEWORK, COMPRISING OF: 2 QTY X DN50 45 DEG BEND 3 QTY X DN50 STRAIGHT PIPE	2	316SS SCH 10	LENGTH TO SUIT
108	DN50 SP-FL PIPEWORK, COMPRISING OF: 1 QTY X DN50 90 DEG BEND 1 QTY X DN50 STRAIGHT PIPE 1 QTY X DN50 FLANGE	2	316SS SCH 10	LENGTH TO SUIT
109	DN50 FL-SP PIPEWORK, COMPRISING OF: 1 QTY X DN50 FLANGE 1 QTY X STRAIGHT PIPE	5	316SS SCH 10	
110	DN80-DN50 FL-SP PIPEWORK, COMPRISING OF: 1 QTY X DN50 FLANGE 1 QTY X STRAIGHT PIPE 1 QTY X ECCENTRIC REDUCER	2	316 SS SCH 10	
111	DN50 DRAIN, COMPRISING OF: 1 QTY x FROG FLAP VALVE 4 QTY x 90 DEG. M/F ELBOWS 1 QTY x PIPE	2	PVC SN8 MIN.	
112	DN50 BOUNDARY KIT ASSEMBLY, COMPRISING OF 1 QTY X BOUNDARY KIT 2 QTY X HEX NIPPLE 2 QTY X BSP FLANGE AS4087	2	316SS	
113	DN50 GRIP-E COUPLING	6	STAINLESS STEEL	NORMA
114	6mm PUMP CHAINS, GR60, LOAD RATED 1 m SPACING W MASTER LINK EITHER ENDS & BOW SHACKLE	2	316SS	
115	CHAIN HOOKS	2	316SS	AQT PN 504501
116	FLOAT HOOK	1	316SS	AQT PN 627534
117	PUMP GUIDERAILS, 2"	2	316SS SCH 10	LENGTH TO SUIT
119	DN50 PIPE SUPPORT CLAMP TYPE TWIN LEG PIPE SUPPORT BRACKETS WITH ANTISPREAD GUIDERAIL BRACKET	2	316SS	REFER AQUATEC STD DWG AQSTD-00001 DETAIL 02
120	DN50 PIPE SUPPORT TWIN LEG PIPE SUPPORT BRACKETS	2	316SS	REFER AQUATEC STD DWG AQSTD-00001 DETAIL 04
121	1-PART ACCESS COVER WITH THE FOLLOWING 3 SIDED PROTECTION CLEAR OPENING 900X600 FLUSH MOUNTED WITH LOW PROFILE HINGES RUBBER SEAL UNDER LIDS , GAS TIGHT CONCEALED LOCK BOXES WITH STD KEY ENTRY REMOVABLE HINGED SAFETY GRATES & EASY LIFT HANDLES	1	ALUMINIUM	AUSTRAL TSP1068
122	STILLING TUBE, ABS, DN100, c/w BRACKETS	1	ABS	LENGTH TO SUIT,
123	FLOAT, LEVEL CONTROL	1	EPDM RUBBER	
124	LEVEL TRANSDUCER	1	-	AQUATEC
125	SWITCHBOARD	1	ALUMINIUM	REFER ELECTRICAL DRAWING SET.

REV	REVISION DETAILS	DRN	CKD	APP	DATE	REF. NUMBER	REFERENCE DOCUMENT
1	ISSUED FOR CONSTRUCTION	CV	NP		19/12/23		

Aquatec Fluid Systems Pty Ltd
www.aquatecenviro.com
ABN - 94 114 944 026
2 Provincial Crescent, Shepparton VIC 3630
T 1300 088 555 / E info@aquatecenviro.com

© Copyright - This drawing and design must not be copied in whole or in part without the written consent of Aquatec Environmental Group Pty Ltd.

Any literary or artistic works contained in this document are copyright Aquatec Environmental Group Pty Ltd ACN 112 325 434 (Aquatec Fluid Systems). Any information in this document, except information also available in publically available sources, is confidential to Aquatec. Reproduction of this document or part of it, or disclosure of the information contained in it, is not permitted without the written consent of Aquatec.

AQUATEC

Drawn	RS
Checked	JS
Approved	
Scale	AS SHOWN
This Drawing must not be used for Construction unless signed as Approved	Original Size A1

Client	ISLAND PLUMBING & GAS
Project	NORFOLK ISLAND MAIN SPS
JOB	SEWER PUMP STATION
Title	SPS - BILL OF MATERIALS (SPS 6)

OP19855	ISSUED FOR CONSTRUCTION (IFC01)	19855 - 10605	1
Project Number	Customer Submission Status	Drawing Number	Revision

Plot Date: 19/12/2023 Plotted by: Conrado Viray Cad File No: C:\Users\cviray\Documents\OP19855 Norfolk Island\Wip\OP19855 NORFOLK ISLAND SPS IFC01.dwg

NON-TRAFFICABLE INSTALLATION

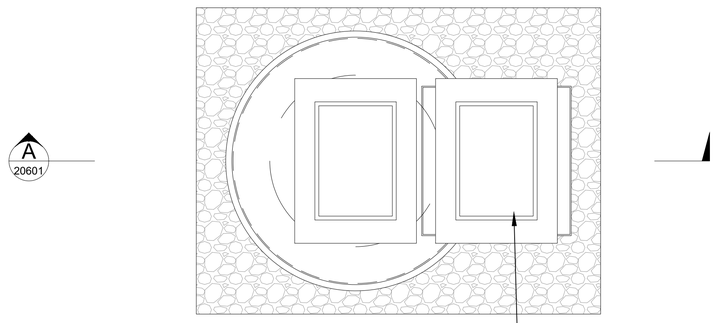

MIN. ALLOWABLE SOIL BEARING CAPACITY UNDERSIDE OF THE REINFORCED CONCRETE SLABS TO BE 100kPA OR AS PER ENGINEER'S REQUIREMENT

FOUNDATION SHALL BE INSPECTED BY AN EXPERIENCED GEO-TECHNICAL ENGINEER TO CONFIRM MINIMUM BEARING REQUIRED AND THERE IS NO RISK OF SETTLEMENT

SPS BACKFILL- PLAN

SCALE 1:25

0 500 1000 1500 2000 2500mm

SCALE 1:25 mm

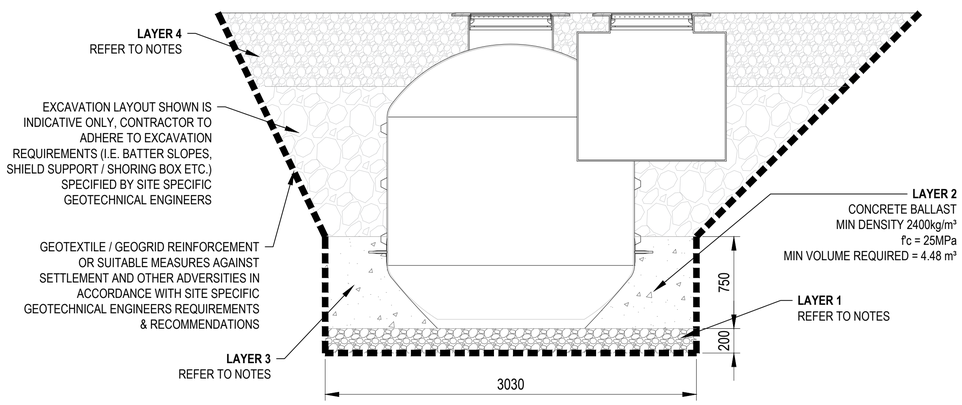

NOTE:
THE BALLAST CONCRETE HEIGHT NEED TO BE MIN. 150mm HIGH ABOE LOWEST RIB (BUOYANCY ANCHOR RIB)

SECTION A 20601

SCALE 1:25

0 500 1000 1500 2000 2500mm

SCALE 1:25 mm

CONSTRUCTION NOTES AND BACKFILLING REQUIREMENTS

CONSTRUCTION NOTES AND BACKFILLING REQUIREMENTS FOR PUMP STATION INSTALLATION (GRAVITY SEWER / RISING MAIN TRENCH FILLING, PIPE EMBEDMENT AND ANY OTHER BACKFILL / BULK EARTHWORKS OUTSIDE THE PUMP STATION INSTALLATION TO BE DESIGNED & CONSTRUCTED BY CIVIL CONTRACTORS)

OCCUPATIONAL HEALTH AND SAFETY:
THE CONTRACTOR IS RESPONSIBLE TO BE KNOWLEDGEABLE OF AND IS BOUND BY THE OH&S STATUTORY REQUIREMENTS PERTAINING TO WORK IN DEEP TRENCHES AND SHAFTS.

THE WATER AUTHORITY:
THE SPECIFICATIONS OF THE RELEVANT PRINCIPLE WATER AUTHORITY FOR THE INSTALLATION AND CONSTRUCTION OF PUMP STATION ARE TO BE ADHERED TO IN ADDITION TO THESE CONSTRUCTION RECOMMENDATIONS.

SITE INVESTIGATION:
CONTRACTORS TO LIAISE WITH THEIR GEOTECHNICAL/CONSULTING ENGINEER TO CONDUCT A SITE/GEOTECHNICAL INVESTIGATION TO ESTABLISH INDICATIVE SUBSURFACE CONDITIONS PRIOR TO THE COMMENCEMENT OF CONSTRUCTION.

BACKFILL DESIGN ASSUMPTIONS & NOTES:
1. BACKFILL DETAILED ON THIS DRAWING ARE BASED ON NORMAL SITE CONDITION.
2. GROUNDWATER LEVEL IS ASSUMED AT FSL FOR STRUCTURAL DESIGN & BUOYANCY / FLOATATION STABILITY CALCULATIONS.

LAYER 1 - FOUNDATION:
FOUNDATION MATERIAL - 20mm CLASS 2 CRUSHED ROCK (NATURAL GRAVEL OR QUARRIED MATERIALS). COMPACTION OF 98% MAXIMUM DRY DENSITY (STD) IN ACCORDANCE WITH AS1289.5.1.
ALTERNATIVELY, GRADE N20 MASS CONCRETE MAY BE CAST AS A SUB BASE WITH 50MM LAYER OF COMPACTED DRAINAGE AGGREGATE BEDDING TO ACHIEVE THE FINISHED PREPARED BASE LEVEL

1. EXCAVATION DEPTH IS TO BE A MINIMUM OF 200MM BELOW BASE OF CASTING AND MAY BE DEEPER AS REQUIRED (OR POURING ADDITIONAL BLINDING) TO ACHIEVE A MINIMUM FOUNDATION BEARING CAPACITY OF 100KPA, FOUNDATION SHALL BE INSPECTED BY AN EXPERIENCED GEO-TECHNICAL ENGINEER TO CONFIRM MINIMUM BEARING REQUIRED AND THERE IS NO RISK OF SETTLEMENT, **(HOLD POINT);**
2. WHERE OVER EXCAVATION HAS OCCURRED BELOW THE PITS, SUCH OVER EXCAVATION SHALL BE FILLED WITH ABOVE MENTIONED FOUNDATION MATERIAL TO THE ENGINEER'S SATISFACTION;
3. DO NOT SLUICE OR FLOOD THE BACKFILL INTO PLACE;
4. REMOVE OR STOCKPILE SPOIL AS REQUIRED;
5. BASE FOUNDATION SHALL BE INSPECTED BY AN EXPERIENCED GEO-TECHNICAL ENGINEER TO CONFIRM MINIMUM BEARING REQUIRED AND THERE IS NO RISK OF SETTLEMENT.

LAYER 2 - CONCRETE BALLAST
CONCRETE WITH MIN DENSITY = 2400kg/m³ AND MIN fc' = 25MPa
1. POUR CALCULATED VOLUME OF CONCRETE AS RETAINER BALLAST AROUND BASE OF UNIT TO RESIST BUOYANCY & MUST BE CONSTRUCTED TO THE DIMENSIONS SHOWN ON THE SECTION;
2. MIN 200MM CLEARANCE NEED TO BE PROVIDED BETWEEN PIPE / PIPE CONNECTIONS' EXTERNAL SURFACE AND CONCRETE BALLAST FOR THE PIPEWORK ENCROACHING CONCRETE BALLAST

LAYER 3 - BACKFILL:
BACKFILL MATERIAL - 20mm CLASS 4 CRUSHED ROCK (NATURAL GRAVEL OR QUARRIED MATERIALS).
1. COMPACTED TO MIN 95% RDD (STD) IN MAXIMUM LIFTS OF 200MM IN ACCORDANCE WITH AS1289.5.1. DO NOT SLUICE OR FLOOD THE BACKFILL INTO PLACE;
2. MIN DENSITY 1850 Kg/m3 (**HOLD POINT**);

LAYER 4 - BACKFILL:
BACKFILL MATERIAL - 20mm CLASS 2 CRUSHED ROCK (NATURAL GRAVEL OR QUARRIED MATERIALS).
1. COMPACTED TO MIN 98% MDD (STD) IN MAXIMUM LIFTS OF 200MM IN ACCORDANCE WITH AS1289.5.1. DO NOT SLUICE OR FLOOD THE BACKFILL INTO PLACE;
2. MIN DENSITY 1850 Kg/m3 (**HOLD POINT**);

MATERIAL SPECIFICATIONS:
NO BACKFILL PARTICLE SIZE GREATER 20MM AROUND OR SURROUNDING THE PITS IS ALLOWED. ALL CHOSEN MATERIALS SHALL BE IN ACCORDANCE WITH THE FOLLOWING, AS REQUIRED:
1. MRWA BACKFILL SPECIFICATION 04-03.2
2. VICROAD STANDARD 812
3. CONSULTING ENGINEERS SITE INVESTIGATION
4. WSAA PRODUCT SPECIFICATION & AS/NZS 2566.2

INTEGRAL VALVE CHAMBER INSTALLATION:
THE VALVE CHAMBER IS FULLY SELF SUPPORTING. TO SAFE GUARD AGAINST CAVITIES GETTING FORMED UNDERSIDE OF THE VALVE CHAMBER SEGMENT, BACK FILL AS FOLLOWS:
1. AFTER THE FINAL RING SECTION IS IN POSITION, PREPARE THE BACKFILL TO WITHIN 20MM OF THE TOP OUTER SEALING EDGE.
2. AQUATEC SITE REPRESENTATIVE ALONG WITH INSTALLATION CONTRACTOR TO CHECK AND ENSURE THAT THE BACKFILL IS SATISFACTORY.
3. LOWER THE VALVE CHAMBER INTO POSITION AND ENSURE AN EVEN SEAL UNDERNEATH RING SECTION

COVER SLAB INSTALLATION:
1. PREPARE THE COMPACTED GROUND TO THE TOP OF THE UPPERMOST WELL INCREMENT.
2. AQUATEC SITE REPRESENTATIVE ALONG WITH INSTALLATION CONTRACTOR TO CHECK AND CONFIRM THIS PRIOR TO LOWERING THE COVER SLAB INTO POSITION.
3. OVERHANG LOAD MUST BEAR ON BACKFILLED GROUND WHEN INSTALLING ONTO FINAL RING SEGMENT.

PERIMETER:
PLACE COMPACTED BACKFILL UP TO FINISHED NATURAL SURFACE LEVEL AROUND ITS PERIMETER.
MAINTAIN GOOD TRANSITION BETWEEN ORIGINAL SURFACES AND THE NEW.

COMPACTION:
COMPACTION AROUND PUMP STATION SITE IS TO BE HOLD POINT & SHALL BE IN ACCORDANCE WITH AS1289.5 AND QUALIFIED GEOTECHNICAL ENGINEER SHALL BE ON SITE DURING COMPACTION FOR SUPERVISION & CERTIFICATION IN ACCORDANCE WITH REQUIREMENTS & RECOMMENDATIONS SPECIFIED BY SITE SPECIFIC GEOTECHNICAL ENGINEERS.

GEOTEXTILE AND/OR GEOGRID REINFORCEMENT:
INSTALL GEOTEXTILE / GEOGRID REINFORCEMENT OR SUITABLE MEASURES AGAINST SETTLEMENT AND OTHER ADVERSITIES IN ACCORDANCE WITH SITE SPECIFIC GEOTECHNICAL ENGINEER'S REQUIREMENTS & RECOMMENDATIONS

EXCAVATION REQUIREMENTS:
EXCAVATION SUPPORT (I.E. BATTER SLOPES, SHIELD SUPPORT / SHORING BOX ETC.) TO BE DESIGNED AND CONSTRUCTED BY CIVIL CONTRACTORS IN ACCORDANCE WITH SITE SPECIFIC GEOTECHNICAL ENGINEER'S REQUIREMENTS & RECOMMENDATIONS

TESTING AND INSPECTION:
TESTING & INSPECTION IS TO BE **HOLD POINT** AND TO BE IN ACCORDANCE WITH THE MINIMUM FIELD DENSITY TESTING FREQUENCY/EXTENT, LEVEL OF SUPERVISION REQUIREMENTS ETC. SPECIFIED BY THE SITE SPECIFIC GEOTECHNICAL ENGINEERS PRIOR TO THE COMMENCEMENT OF CONSTRUCTION. INSPECTION OF THE CIVIL CONTRACTOR SITE WORKS AND METHOD OF INSTALLATION MUST BE PERFORMED BY A QUALIFIED GEOTECHNICAL ENGINEER TO VERIFY THE STANDARDS REQUIREMENTS HAVE BEEN MET.

SITE SPECIFIC RECOMMENDATION:
1. GEOTECHNICAL SUPERVISION DURING CONSTRUCTION IS RECOMMENDED TO ASSIST THE CONSTRUCTION AND EVALUATE THE EXCAVATION STABILITY. CONTRACTORS TO LIAISE WITH SITE SPECIFIC GEOTECHNICAL ENGINEERS FOR TESTING REQUIREMENTS (I.E FIELD DENSITY TESTING FREQUENCY/EXTENT) & INSPECTION REQUIREMENTS (I.E. LEVEL OF SUPERVISION), AND TO BE IN ACCORDANCE WITH SITE SPECIFIC GEOTECHNICAL ENGINEERS ADVISE.
2. CONTRACTORS TO ADHERE TO ANY EARTHWORK, EXCAVATION, BACKFILL, CONSTRUCTION, SITE SPECIFIC TREATMENT REQUIREMENTS/RECOMMENDATIONS SPECIFIED BY SITE SPECIFIC GEOTECHNICAL ENGINEERS (I.E. DRAINAGE MEASURES, DE-WATERING MEASURES, GEOTEXTILE/GEOGRID REINFORCEMENT MEASURES AGAINST SETTLEMENT, EXCAVATION SUPPORT REQUIREMENTS, EROSION & SEDIMENT CONTROL MEASURES, MOISTURE CONTROL MEASURES, TREE REMOVAL/PLANTATION MEASURES, ROOT TREATMENTS, ACID SULFATE SOIL MANAGEMENT MEASURES).
3. CONTRACTORS TO ENSURE BEARING CAPACITY > 100 KPA IS AVAILABLE AT FOUNDATIONS.
4. CONTRACTORS TO REMOVE ANY EXISTING SOIL (I.E FILL, TOPSOIL, DISTURBED/WEAKENED SOILS, ORGANIC/DELETERIOUS/PERISHABLEMATTER) FROM THE PUMP STATION SITE, SPECIFIED BY SITE SPECIFIC GEOTECHNICAL ENGINEERS AS NOT RECOMMENDED/SUITABLE FOR STRUCTURAL FILL.
5. CONTRACTORS TO TAKE NECESSARY PRECAUTIONS/ TREATMENTS TO PREVENT ANY STRUCTURAL DAMAGES TO THE PUMP STATION STRUCTURES & PIPEWORK DUE TO ANY ADVERSE SITE SOIL CONDITIONS (I.E. FILL, CONTAMINATED/ REACTIVE/ SOFT/ COLLAPSING/DISPERSIVE/ FISSURED SOILS, SETTLEMENTS, ABNORMAL MOISTURE CONDITIONS, TREES/ROOTS, ACID SULFATE SOIL)
6. CONTRACTOR TO INVESTIGATE IF THERE ARE ANY UNDERGROUND SERVICES PRIOR TO COMMENCEMENT OF EXCAVATIONS.
7. DURING CONSTRUCTION THE CONTRACTOR SHALL BE RESPONSIBLE FOR MAINTAINING THE STRUCTURE IN A STABLE CONDITION AND ENSURING NO PART SHALL BE OVERSTRESSED UNDER CONSTRUCTION ACTIVITIES.
8. ALL EARTHWORKS SHALL BE CARRIED OUT IN ACCORDANCE WITH AS 3798-2007
9. CONTRACTOR TO GAIN SITE SPECIFIC GEOTECHNICAL ENGINEER'S DIRECTION THAT THE PROPOSED BACKFILL DETAILED ON THIS DRAWING IS APPROPRIATE FOR EXISTING SITE/SOIL AND ON-SITE LOADING CONDITIONS PRIOR TO COMMENCING CONSTRUCTION **(HOLD POINT)**

CIVIL CONTRACTOR SCOPE OF WORKS | AQUATEC SCOPE OF WORKS

REV	REVISION DETAILS	DRN	CKD	APP	DATE	REF. NUMBER	REFERENCE DOCUMENT
1	ISSUED FOR CONSTRUCTION	CV	NP		19/12/23	19855-80106	SPS BUOYANCY CALCULATION

Aquatec Fluid Systems Pty Ltd
www.aquatecenviro.com
ABN - 94 114 944 026
2 Provincial Crescent, Shepparton VIC 3630
T 1300 088 555 / E info@aquatecenviro.com

© ***Copyright*** - This drawing and design must not be copied in whole or in part without the written consent of Aquatec Environmental Group Pty Ltd.

Any literary or artistic works contained in this document are copyright Aquatec Environmental Group Pty Ltd ACN 112 325 434 (Aquatec Fluid Systems). Any information in this document, except information also available in publically available sources, is confidential to Aquatec. Reproduction of this document or part of it, or disclosure of the information contained in it, is not permitted without the written consent of Aquatec.

AQUATEC

Drawn	RS
Checked	JS
Approved	
Scale	AS SHOWN
This Drawing must not be used for Construction unless signed as Approved	Original Size A1

Client	ISLAND PLUMBING & GAS
Project	NORFOLK ISLAND MAIN SPS
JOB	SEWER PUMP STATION
Title	BACKFILL DETAILS (SPS 6)

OP19855	ISSUED FOR CONSTRUCTION (IFC01)	19855-20601	1
Project Number	Customer Submission Status	Drawing Number	Revision

APPENDIX 2

ESCP Drawings

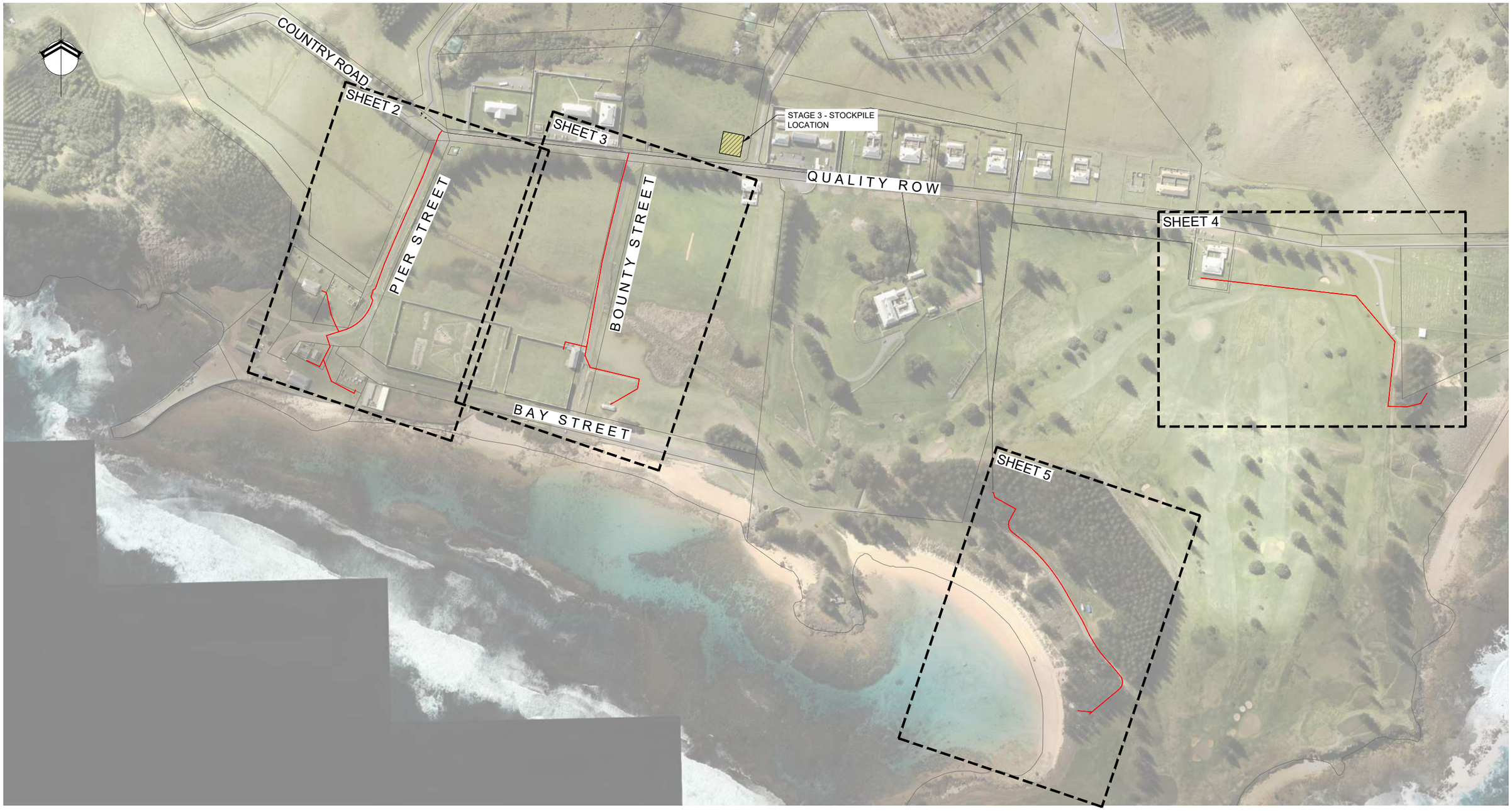

GENERAL ARRANGEMENT

1:2,000 at A1
1:4,000 at A3

Revision		Des	Drn	Rvd	App	Date
A	For Detailed Design	ACS	ESG	ACS	ACS	31/08/23

Verify all dimensions on site before commencing work. Prioritise figured dimensions over scaling. Refer all discrepancies to the drawing office. This document and the copyright in this document remain the property of Fluent Infrastructure Solutions Ltd. The contents of this document may not be reproduced either in whole or in part by any means whatsoever without the prior written consent of Fluent Infrastructure Solutions Ltd.

Fluent SOLUTIONS
www.fluentsolutions.co.nz

Client
Australian Government
Department of Infrastructure, Transport, Regional Development and Communications

Project Title
Norfolk Island
KAVHA Wastewater Scheme

Sheet Title
Stage 3
Erosion Sediment Control Plan
Overview
(Sheets 1-5)

Scale (A1 Original) 1:2000 m
Issue For Detailed Design

Project No	Sheet	Revision
000770	Sheet 1	A

File: Z:\2_Jobs\000761 - 000770\000770 - norfolk island ww-stg 2&3\6_drawings\04_Production\Stage 3\ESCP\PRO_Norfolk_Stage 3_Erosion Sediment Control Plan

0 10 20 30 40 50 mm 75 mm 100 mm

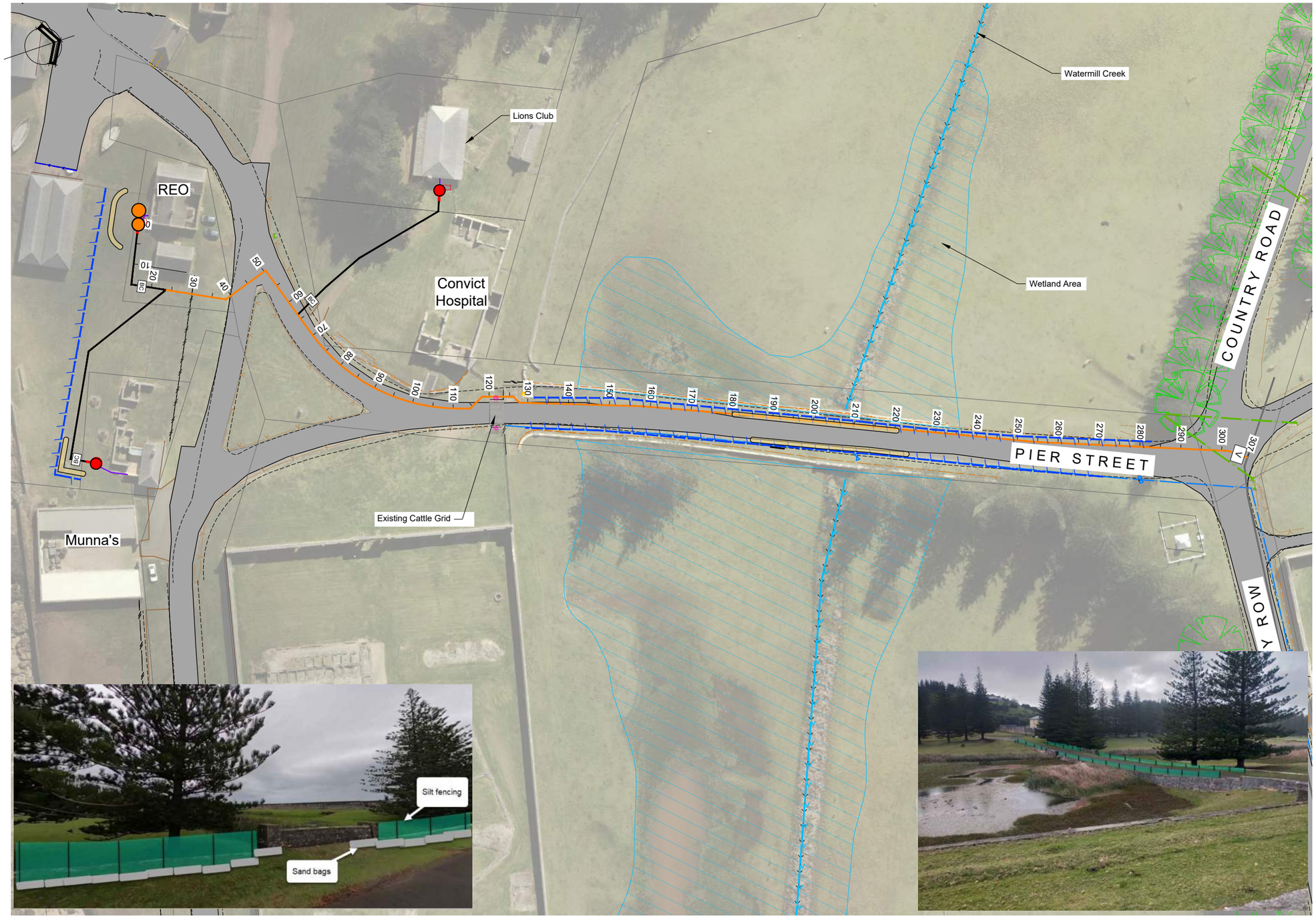

LEGEND

- Pump Station 1500 L
- Pump Station 950 L
- Rising Main (DN40 PE100 PN16)
- Rising Main (DN50 PE100 PN16)
- Rising Main (DN63 PE100 PN16)
- Control cables between Pump Station & Control Board
- Stockpile location
- Sand bag erosion protection
- Existing septic tank to be decommissioned
- Silt Fence
- Wetland Area
- Watermill Creek

LAYOUT PLAN

1:500 at A1
1:1000 at A3

Revision		Des	Drn	Rvd	App	Date
A	For Detailed Design	ACS	ESG	ACS	ACS	31/08/23

Verify all dimensions on site before commencing work. Prioritise figured dimensions over scaling. Refer all discrepancies to the drawing office.
This document and the copyright in this document remain the property of Fluent Infrastructure Solutions Ltd. The contents of this document may not be reproduced either in whole or in part by any means whatsoever without the prior written consent of Fluent Infrastructure Solutions Ltd.

Fluent SOLUTIONS
www.fluentsolutions.co.nz

Client
Australian Government
Department of Infrastructure, Transport, Regional Development and Communications

Project Title
Norfolk Island
KAVHA Wastewater Scheme

Sheet Title
Stage 3
Erosion Sediment Control Plan
Pier Street

Scale (A1 Original) 1:500 m
Issue For Detailed Design

Project No	Sheet	Revision
000770	Sheet 2	A

File: Z:\2_Jobs\000781 - 000770\000770 - norfolk island ww-stg 2&3\6_drawings\04_Production\Stage 3\ESCP\PRO_000770_Stage 3_Pier Precinct

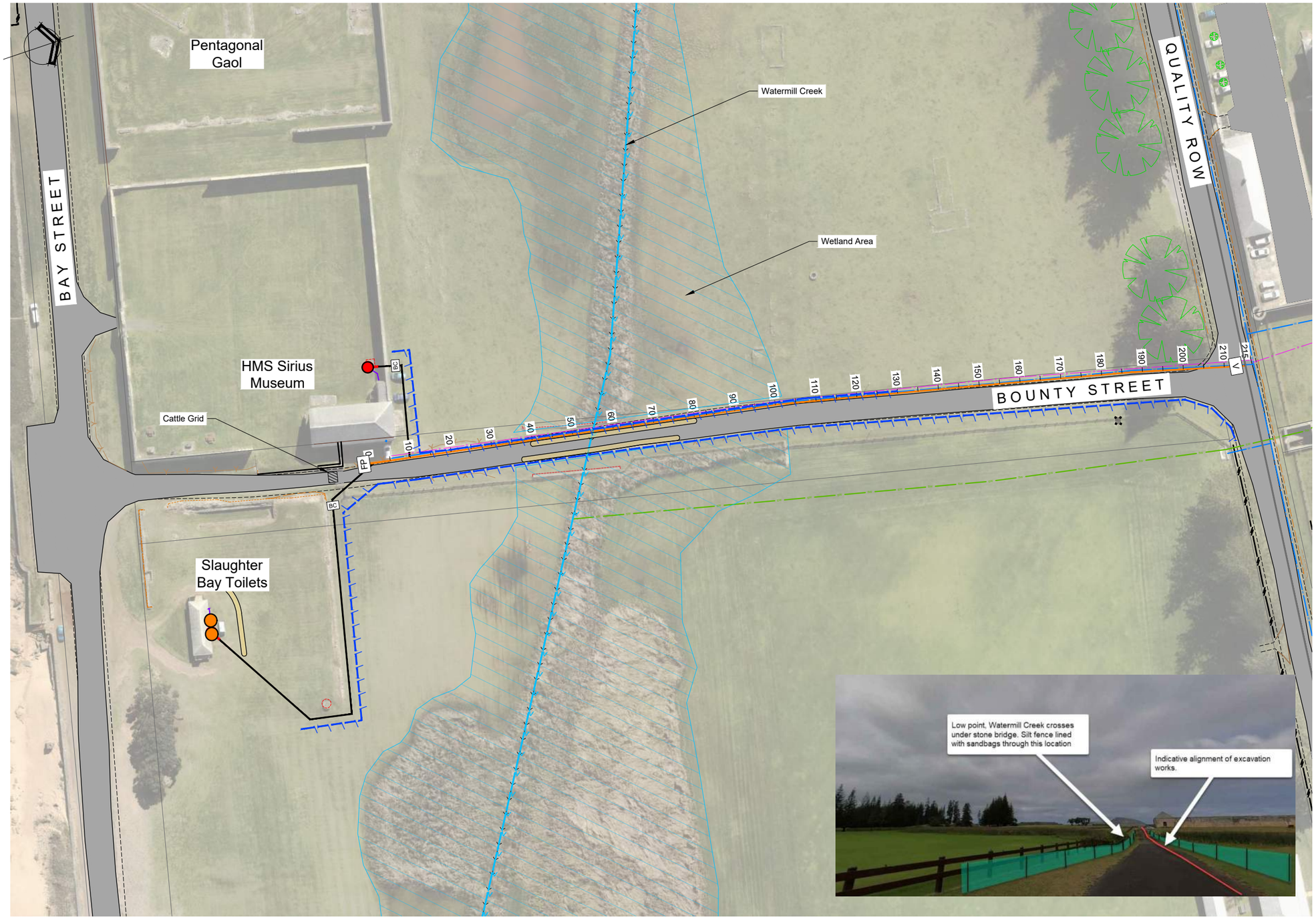

LEGEND

- Pump Station 1500 L
- Pump Station 950 L
- Rising Main (DN40 PE100 PN16)
- Rising Main (DN50 PE100 PN16)
- Rising Main (DN63 PE100 PN16)
- Control cables between Pump Station & Control Board
- Stockpile location
- Sand bag erosion protection
- Existing septic tank to be decommissioned
- Silt Fence
- Wetland Area
- Watermill Creek

LAYOUT PLAN

1:500 at A1
1:1000 at A3

Revision		Des	Drn	Rvd	App	Date
A	For Detailed Design	ACS	ESG	ACS	ACS	31/08/23

Verify all dimensions on site before commencing work. Prioritise figured dimensions over scaling. Refer all discrepancies to the drawing office. This document and the copyright in this document remain the property of Fluent Infrastructure Solutions Ltd. The contents of this document may not be reproduced either in whole or in part by any means whatsoever without the prior written consent of Fluent Infrastructure Solutions Ltd.

Fluent SOLUTIONS
www.fluentsolutions.co.nz

Client
Australian Government
Department of Infrastructure, Transport, Regional Development and Communications

Project Title
Norfolk Island
KAVHA Wastewater Scheme

Sheet Title
Stage 3
Erosion Sediment Control Plan
Bounty Street

Scale (A1 Original) 1:500 m
Issue For Detailed Design

Project No	Sheet	Revision
000770	Sheet 3	A

File: Z:\2_Jobs\000781 - 000770\000770 - norfolk island ww-stg 2&3\6_drawings\04_Production\Stage 3\ESCP\PRO_000770_Stage 3_Bounty Street

LEGEND

- Pump Station 1500 L
- Pump Station 950 L
- Rising Main (DN40 PE100 PN16)
- Rising Main (DN50 PE100 PN16)
- Rising Main (DN63 PE100 PN16)
- Control cables between Pump Station & Control Board
- Stockpile location
- Sand bag erosion protection
- Existing septic tank to be decommissioned
- Silt Fence
- Wetland Area
- Watermill Creek

LAYOUT PLAN

1:500 at A1
1:1000 at A3

Revision	Des	Drn	Rvd	App	Date
A For Detailed Design	ACS	ESG	ACS	ACS	31/08/23

Verify all dimensions on site before commencing work. Prioritise figured dimensions over scaling. Refer all discrepancies to the drawing office. This document and the copyright in this document remain the property of Fluent Infrastructure Solutions Ltd. The contents of this document may not be reproduced either in whole or in part by any means whatsoever without the prior written consent of Fluent Infrastructure Solutions Ltd.

Fluent SOLUTIONS
www.fluentsolutions.co.nz

Client
Australian Government
Department of Infrastructure, Transport, Regional Development and Communications

Project Title
Norfolk Island
KAVHA Wastewater Scheme

Sheet Title
Stage 3
Erosion Sediment Control Plan
Cemetery Bay

Scale (A1 Original) 1:500 m
Issue For Detailed Design

Project No	Sheet	Revision
000770	Sheet 4	A

File: Z:\2_Jobs\000761 - 000770\000770 - norfolk island ww-stg 2&3\6_drawings\04_Production\Stage 3\ESCP\DESIGN_Stage3_Cemetery

LEGEND

- Pump Station 1500 L
- Pump Station 950 L
- Rising Main (DN40 PE100 PN16)
- Rising Main (DN50 PE100 PN16)
- Rising Main (DN63 PE100 PN16)
- Control cables between Pump Station & Control Board
- Stockpile location
- Sand bag erosion protection
- Existing septic tank to be decommissioned
- Silt Fence
- Wetland Area
- Watermill Creek

LAYOUT PLAN

1:500 at A1
1:1000 at A3

Revision		Des	Drn	Rvd	App	Date
A	For Detailed Design	ACS	ESG	ACS	ACS	31/08/23

Verify all dimensions on site before commencing work. Prioritise figured dimensions over scaling. Refer all discrepancies to the drawing office. This document and the copyright in this document remain the property of Fluent Infrastructure Solutions Ltd. The contents of this document may not be reproduced either in whole or in part by any means whatsoever without the prior written consent of Fluent Infrastructure Solutions Ltd.

Fluent SOLUTIONS
www.fluentsolutions.co.nz

Client
Australian Government
Department of Infrastructure, Transport, Regional Development and Communications

Project Title
Norfolk Island
KAVHA Wastewater Scheme

Sheet Title
Stage 3
Erosion Sediment Control Plan
Lone Pine

Scale (A1 Original) 1:500 m
Issue For Detailed Design

Project No	Sheet	Revision
000770	Sheet 5	A

File: Z:\2_Jobs\000761 - 000770\000770 - norfolk island ww-stg 2&3\6_drawings\04_Production\Stage 3\ESCP\PRO_000770_Stage3_Lone Pine 2

100 mm 75 mm 50 mm 40 30 20 10 0 (mm)

PS3 Location

LEGEND

- Pump Station 1500 L
- Pump Station 950 L
- Rising Main (DN40 PE100 PN16)
- Rising Main (DN50 PE100 PN16)
- Rising Main (DN63 PE100 PN16)
- Stockpile location
- Sand bag erosion protection
- Existing septic tank to be decommissioned
- Silt Fence
- Wetland Area
- Watermill Creek

PUMP STATION LAYOUT PLAN

1:100 at A1
1:200 at A3

Revision	Des	Drn	Rvd	App	Date
A For Detailed Design	ACS	ESG	ACS	ACS	

Verify all dimensions on site before commencing work. Prioritise figured dimensions over scaling. Refer all discrepancies to the drawing office. This document and the copyright in this document remain the property of Fluent Infrastructure Solutions Ltd. The contents of this document may not be reproduced either in whole or in part by any means whatsoever without the prior written consent of Fluent Infrastructure Solutions Ltd.

Fluent SOLUTIONS
www.fluentsolutions.co.nz

Client
Australian Government
Department of Infrastructure, Transport, Regional Development and Communications

Project Title
Norfolk Island
KAVHA Wastewater Scheme

Sheet Title
Stage 3
Erosion Sediment Cotrol Plan
Pump Station 3

Scale (A1 Original) metres 1:100 m
Issue For Detailed Design
Project No 000770
Sheet
Revision A

File: Z:\2_Jobs\000761 - 000770\000770 - Norfolk Island WW-STG 2&3\6_Drawings\04_Production\Stage 3\ESCP\000770 Norfolk_Stage 2A_PS

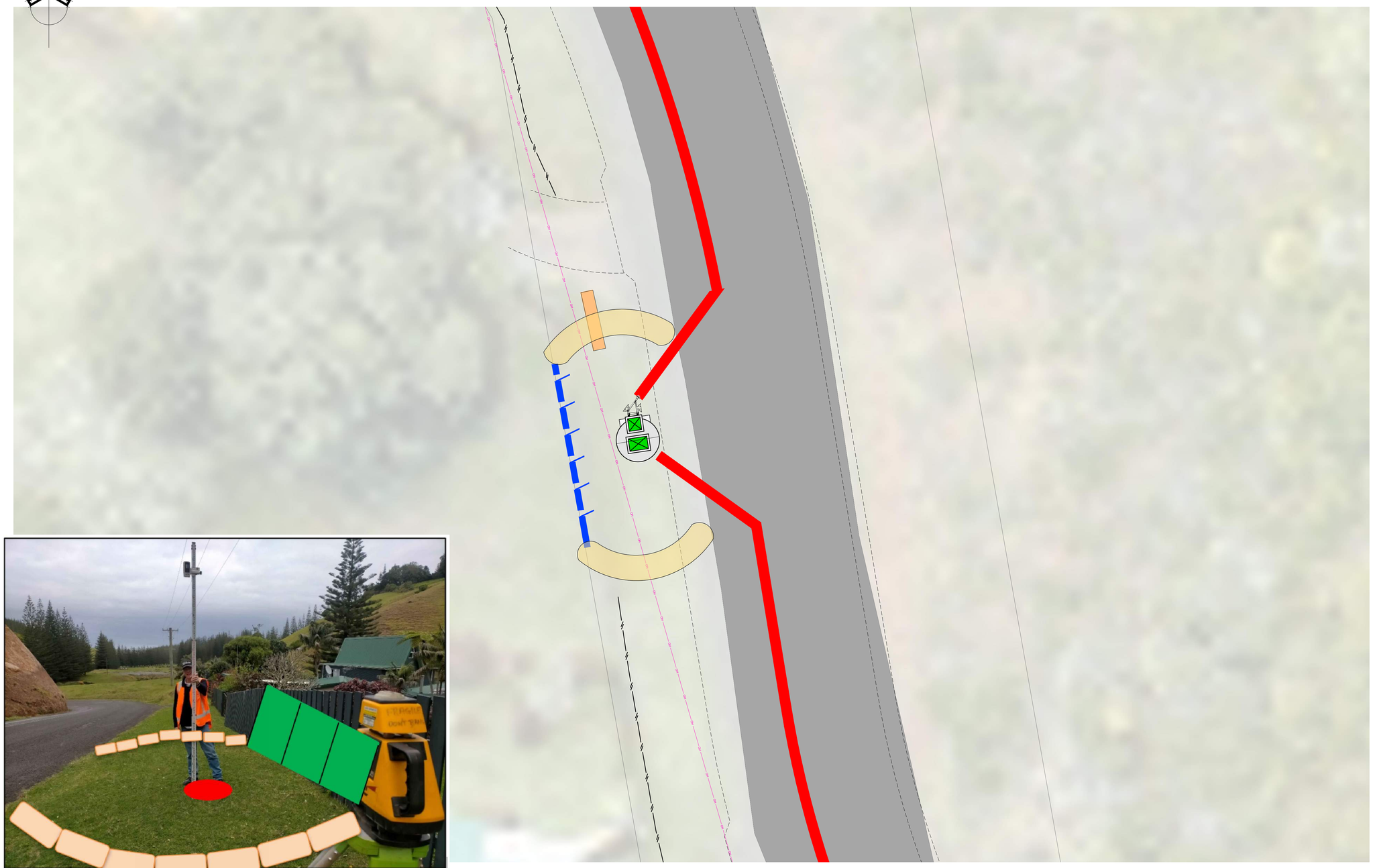

LEGEND

- Pump Station 1500 L
- Pump Station 950 L
- Rising Main (DN40 PE100 PN16)
- Rising Main (DN50 PE100 PN16)
- Rising Main (DN63 PE100 PN16)
- Stockpile location
- Sand bag erosion protection
- Existing septic tank to be decommissioned
- Silt Fence
- Wetland Area
- Watermill Creek

PS4 Location

PUMP STATION LAYOUT PLAN

1:100 at A1
1:200 at A3

Revision		Des	Drn	Rvd	App	Date
A	For Detailed Design	ACS	ESG	ACS	ACS	

Verify all dimensions on site before commencing work. Prioritise figured dimensions over scaling. Refer all discrepancies to the drawing office. This document and the copyright in this document remain the property of Fluent Infrastructure Solutions Ltd. The contents of this document may not be reproduced either in whole or in part by any means whatsoever without the prior written consent of Fluent Infrastructure Solutions Ltd.

Fluent SOLUTIONS
www.fluentsolutions.co.nz

Client
Australian Government
Department of Infrastructure, Transport, Regional Development and Communications

Project Title
Norfolk Island
KAVHA Wastewater Scheme

Sheet Title
Stage 3
Erosion Sediment Control Plan
Pump Station 4

Scale (A1 Original) metres 1:100 m
Issue For Detailed Design
Project No 000770
Sheet
Revision A

File: Z:\2_Jobs\000761 - 000770\000770 - Norfolk Island WW-STG 2&3\6_Drawings\04_Production\Stage 3\ESCP\000770 Norfolk_Stage 2&_PS

LEGEND

- Pump Station 1500 L
- Pump Station 950 L
- Rising Main (DN40 PE100 PN16)
- Rising Main (DN50 PE100 PN16)
- Rising Main (DN63 PE100 PN16)
- Stockpile location
- Sand bag erosion protection
- Existing septic tank to be decommissioned
- Silt Fence
- Wetland Area
- Watermill Creek

PS5 Location

PUMP STATION LAYOUT PLAN

1:100 at A1

1:200 at A3

Revision	Des	Drn	Rvd	App	Date
A For Detailed Design	ACS	ESG	ACS	ACS	

Verify all dimensions on site before commencing work. Prioritise figured dimensions over scaling. Refer all discrepancies to the drawing office. This document and the copyright in this document remain the property of Fluent Infrastructure Solutions Ltd. The contents of this document may not be reproduced either in whole or in part by any means whatsoever without the prior written consent of Fluent Infrastructure Solutions Ltd.

Fluent SOLUTIONS

www.fluentsolutions.co.nz

Client

Australian Government

Department of Infrastructure, Transport, Regional Development and Communications

Project Title

Norfolk Island

KAVHA Wastewater Scheme

Sheet Title

Stage 3

Erosion Sediment Control Plan

Pump Station 5

Scale (A1 Original) metres 1:100 m

Issue For Detailed Design

Project No	Sheet	Revision
000770		A

File: Z:\2_Jobs\000761 - 000770\000770 - Norfolk Island WW-STG 2&3\6_Drawings\04_Production\Stage 3\ESCP\000770 Norfolk_Stage 2A_PS

LEGEND

- Pump Station 1500 L
- Pump Station 950 L
- Rising Main (DN40 PE100 PN16)
- Rising Main (DN50 PE100 PN16)
- Rising Main (DN63 PE100 PN16)
- Stockpile location
- Sand bag erosion protection
- Existing septic tank to be decommissioned
- Silt Fence
- Wetland Area
- Watermill Creek

PS6 Location

PUMP STATION LAYOUT PLAN

1:100 at A1
1:200 at A3

Revision		Des	Drn	Rvd	App	Date
A	For Detailed Design	ACS	ESG	ACS	ACS	

Verify all dimensions on site before commencing work. Prioritise figured dimensions over scaling. Refer all discrepancies to the drawing office. This document and the copyright in this document remain the property of Fluent Infrastructure Solutions Ltd. The contents of this document may not be reproduced either in whole or in part by any means whatsoever without the prior written consent of Fluent Infrastructure Solutions Ltd.

Fluent SOLUTIONS
www.fluentsolutions.co.nz

Client
Australian Government
Department of Infrastructure, Transport, Regional Development and Communications

Project Title
Norfolk Island
KAVHA Wastewater Scheme

Sheet Title
Stage 3
Erosion Sediment Control Plan
Pump Station 6

Scale (A1 Original) metres 1:100 m
Issue For Detailed Design
Project No 000770
Sheet
Revision A

File: Z:\2_Jobs\000761 - 000770\000770 - Norfolk Island WW-STG 2&3\6_Drawings\04_Production\Stage 3\ESCP\000770 Norfolk_Stage 2A_PS

APPENDIX 3

Aquatec Controller Information

aquatec

Pressure Sewer Systems

—

Built under ISO9001
Quality Management System

Built to WSAA Standards
Certified by BSI to NSF/ANS146

What is a pressure sewer system?

A pressure sewer system is a network of fully sealed sewer pipes, which are fed by a grinder pump at each property. The pump grinds the solids present in the wastewater to a fine "slurry", which is then pumped through a small diameter pipeline from the house to the main, and the main to the treatment facility.

aquatec

Pressure Sewer Systems

—

Aquatec Pressure Sewer Systems are one of the most economical and environmentally friendly sewerage systems on the market today.

Aquatec is Australasia's number one provider of customised end-to-end pressure sewer systems.

Aquatec is at the forefront of the wastewater revolution. We want more innovative systems and smarter responses without extra costs or excessive time involvement.

Aquatec takes a customised approach to the design of Pressure Sewer Systems based on practical requirements and site conditions. Single, dual and triple pump options meet changing demands across domestic, commercial and industrial applications.

Manufacturing Process

Aquatec's Pressure Sewer Systems are manufactured in a controlled factory environment under strict ISO 9001:2008 and BSI Global Standards.

Proprietary chamber designs are pre-moulded to exact specifications, stringently tested and certified prior to delivery.

ISO9001: 2008 Accreditation
Designed to comply with AS/NZS1546.1:2008
BSI Global Standards Mark Certification
NSW Health Certificate of Accreditation
NT Government Department of Health and Families
SA Health Certificate of Accreditation

Chambers

Aquatec's Pressure Sewer chambers are engineered with a domed base forcing solids into the cutter of the pump, eliminating the potential for solids build up in dead zones and associated odour issues.

Product Range

Models	*Litres**	*Diameter*	*Depth*	*Depth to inlet (max)*
PSS900	900	1.2m	1.45m	0.9m
PSS950	950	1.1m	1.65m	1.0m
PSS1100	1100	1.0m	1.6m	1.1m
PSS1500	1500	1.0m	2.2m	1.7m
PSS3000	3000	1.5m	2.2m	1.7m
PSS5000	5000	1.5m	3.0m	2.4m
PSS7500	7500	1.85m	3.0m	2.4m
PSS10000	10000	2.0m	3.2m	2.4m
PSS15000	15000	2.5m	3.5m	2.9m

* - Nominal

Enviroplex

A unique shallow base for adaptability across adverse ground conditions and rocky terrains.

LDPE (Low Density Polyethylene) roto moulded from high-grade virgin polyethylene.

Duplex

A dual pump system for multiple residential, industrial or commercial applications.

LDPE or fibreglass dependent on daily volume requirements.

Triplex

Fibreglass chamber engineered on a case-by-case basis for multiple commercial and industrial applications where greater storage and depth is required.

Enduraplex

A world class injection moulded single pump system designed to endure the most rigorous conditions.

1. Self venting lid, with provision for optional profile seal for flood prone areas.
2. Heavy duty glass filled polypropylene cable hooks.
3. Child safe one bolt cover for ease of removal, with pad lockable option.
4. Specially manufactured PN16 wire enforced rubber discharge hose.
5. 316 S/S outlet, valve & disconnection coupling
6. Honeycomb inspired rib design to provide maximum strength whilst remaining lightweight.
7. High strength injection moulded HDPE** tank designed for 50 year life.
8. Anti-siphon valve and tank flush.
9. Smooth tank interior minimising solids build up.
10. Pressure transducer providing incremental control and measurement of tank level.
11. Moulded inlet stubs to ensure no leakage to the environment.
12. OGT Omni Grind Turbine pump providing peace of mind grinding and 20 year life*.

*Tested for the equivalent of 20 years usage for domestic sewer applications.

** High Density Polyethylene.

Compliant with WSA-07

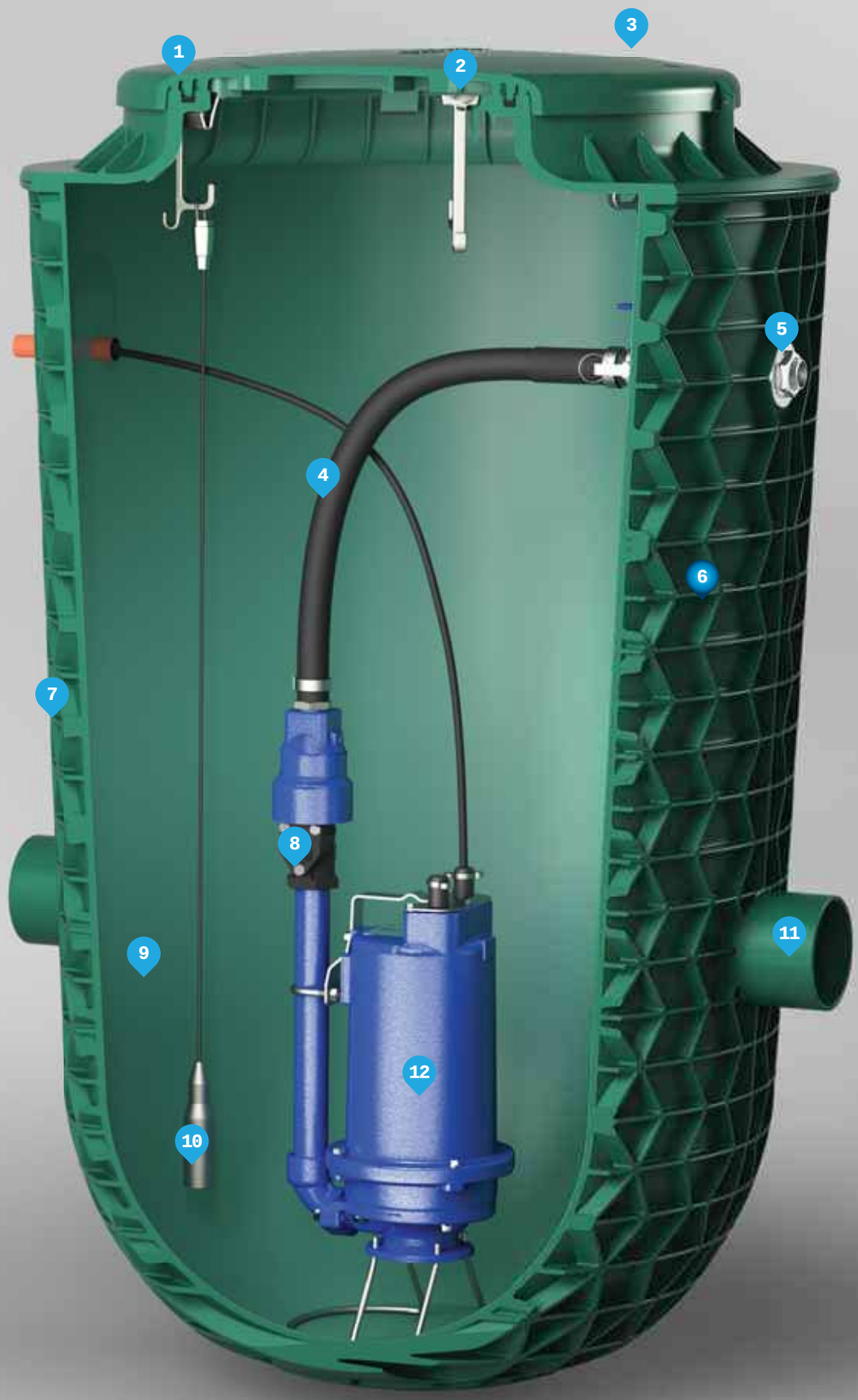

Pumps

With an International Protection Rating of IP68, Aquatec's pumps hold the highest levels of protection on the market today.

Omni Grind Turbine - OGT

- New innovation technology
- Low amp turbine technology
- Residential, industrial and commercial applications
- Smaller cutter radius for greater ability to grind fibrous materials
- Special Aerospace Industry coating to prevent wear from abrasive products
- Non-contact pumping assembly with minimal wearing parts
- Flows up to 1.2l/s giving higher scouring velocities
- Capable and tested to operate at 80m continuously giving greater flexibility for network design
- Certified by BSI to NSF/ANS146
- Class F motor insulation
- Highest cutting force of any pressure sewer pump

Omni Grind Plus - OGP

- For commercial, industrial and large scale residential applications
- Recessed vortex impellers for higher flows with reduced wear
- Flows up to 1.75l/s
- Capable and tested to operate at 60m
- 1.5kw motor
- Available in single or three phase
- Hydraulically balanced
- Class F motor insulation

Optional Accessories

Aquatec offers a wide range of Optional Accessories to meet or improve on your project specifications. Our Technical Consultants make recommendations for enhancements to your Pressure Sewer System based on budgets and the unique demands of your application.

Key Optional Accessories include:

- Full Range of Custom Chambers
- External Storage Vessels
- Service trailers and equipment
- Access Covers
- Odour Controls
- Swiftlift Pump Trolley

Pump Upgrades

Upgrade kits with new components purpose-built for existing networks are designed to retrofit into your existing system for trouble free operation.

Grinder Pump Performance Comparison

- OGT Regenerative Turbine (Recommended Operating Range)
- OGP 2 Stage Centrifugal
- Progressing Cavity Recommended Operating Range (for comparison)

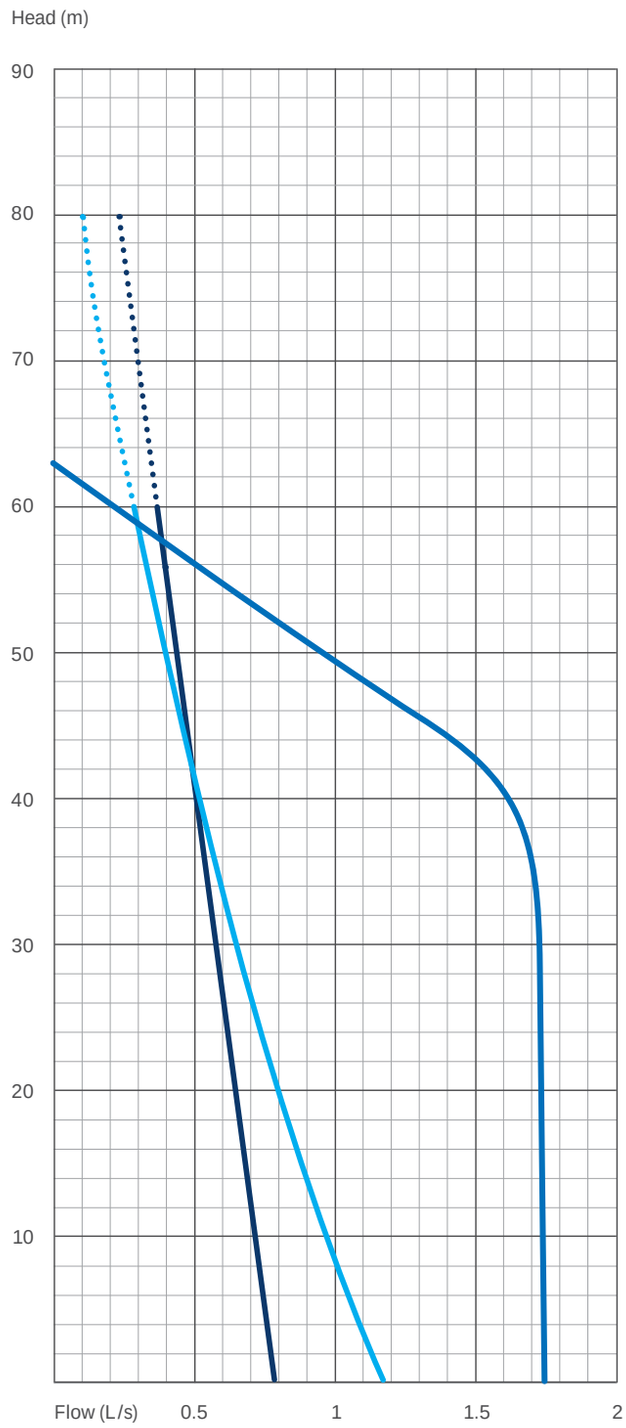

Level Controls

Aquatec offers a variety of methods for level control, from simple level monitoring and control to remote real level display and operation.

Hydrostatic Transducer

Aquatec's Hydrostatic Transducers deliver offsite monitoring and control of liquid levels with pinpoint accuracy via desktop or smartphone, providing a superior level of reliability and precision over solid state sensors.

- Provides incremental liquid level via signal output
- Compact design
- Wholly protected sensor body
- Industry Standard IP68 submergence rating
- Flush diaphragm to withstand chemicals, fats and grime
- Designed to function continuously in challenging conditions

Float Switches

Aquatec's Float Switches are capable of operating pumps or alarms either integral with the pump or wired directly to the control panel connection.

- Consistent and reliable long life performance
- Double liquid and raw sewerage proof chamber protecting the internal mechanism
- Smooth, circular shape ideal for Pressure Sewer applications
- Simple and proven operation

Accessories

Aquatec's Reticulation Valve Kits introduce a range of mechanisms throughout the network for preventative pressure management, automatic cleaning and scheduled maintenance. All reticulation kits are 316 SS.

From isolating individual properties or lines within the network, to periodic cleaning or pressure reduction, Aquatec's Reticulation Valve Kits are available in kit form inclusive of all parts for immediate installation.

Boundary Connection Kits

Aquatec's Boundary Connection Kits provide a means of isolation at the property boundary. Each kit includes a full bore isolation valve, a non-return valve, inspection tee and an optional flushing point mounted inside a polycarbonate or concrete valve box marked 'Pressure Sewer.'

Lid Ratings

Class A
Class B
Class D

Isolation Valve Kits

Available with extension spindles for ease of operation, Aquatec's Isolation Valve Kits provide line isolation throughout the reticulation for scheduled maintenance. Each kit includes a flanged, resilient seated isolation valve, polyethylene connection stubs with backing rings, gaskets and bolts, and a cast iron twist lock inspection cover with concrete surround.

Flushing Point Kits

Aquatec's Flushing Point Kits provide a means of eduction or introduction of high volumes of liquid for periodic scouring of a pressure sewer main. Each kit includes pipework, full bore lockable isolation valve and camlock connection all mounted inside an underground chamber.

Lid Ratings

Class B
Class D

Air Valve Kits

Aquatec's Air Valve Kits provide a means of air release for high sections of the network, and as a siphon break for descending mains. Each kit includes a double acting sewerage combination air valve, isolation valve and interconnecting pipework, mounted inside a heavy duty, underground chamber.

Lid Ratings

Class B
Class D

OmniSmart Controller

The OmniSmart controller is a fully automated pre-programmed device that accurately controls flows within your reticulation systems prioritising pump operation to optimise your pressure sewer network.

Aquatec's Omnismart controller thinks outside the box, by:

- Integrating your system into the surrounding sewer connections;
- Can be retrofitted to upgrade existing pressure sewer installations
- Optimising the whole network by analysing usage and flow to iron out the peaks and troughs.

This optimisation:

- Increases the life of your whole network;
- Self-scouring rising mains by creating daily 'flushing waves';
- Prioritises operation after power failure based on effluent levels in each tank;
- Improves flow and minimises retention issues;
- Reduces both capital and operation expenditure;
- Reduces additional infrastructure/ maintenance requirements; and
- Reduces whole of life costs by increasing the life expectancy of existing assets.

	OS1000 Series		*OS6000 Series*	
Features	*1000A*	*1000B*	*6000A*	*6000B*
Key lockable IP65 polycarbonate green enclosure	•	•	•	•
Backing plate for easy mounting on wall or post	•	•	•	•
90Db audible alarm with automatic mute, night time chirp and self-correction	•	•	•	•
External mute button for audible alarm	•	•	•	•
Strobe light for fault notification and identification	•	•	•	•
Automatic and manual pump modes	•	•	•	•
Microprocessor based operation with upgradeable firmware and is fully programmable	•	•	•	•
Compatible with level switches or hydrostatic transducers	•	•	•	•
Back up high level float switch compatible	•	•	•	•
Brown out/Low voltage protection	•	•	•	•
High voltage protection	•	•	•	•
Adjustable Over Pressure Protection	•	•	•	•
Motor current monitoring and protection for both low and high amps	•	•	•	•
Real time Clock (date and time)	•	•	•	•
Pump protection for Anti-seize, excessive run time and motor starts	•	•	•	•
Adjustable pump and alarm activation points	•	•	•	•
Adjustable Alarm delays	•	•	•	•
LED system status indication	•	•	•	•
Internal status history (last 2500 events including motor state, adjustable fluid levels granularity, configurational changes and alarms)	•	•	•	•
USB Plug and Play administration interface and history	•	•	•	•
SCOP Compatible for improved system health and diurnal curve flattening	•	•	•	•
Controller behaviour and activation based on time of day and fluid levels	•	•	•	•
Adjustable start delay after power failure based on fluid levels	•	•	•	•
Automatic scouring, time delay, and storage modes	•	•	•	•
Output to control external devices	•	•	•	•
Battery Backup for Alarms, fluid levels, history, and telemetry/SMS	●	•	•	•
Hours run and pump start counter*		•	•	•
Backlit LCD screen for system status, diagnostics and fluid level	●	•	●	●
Telemetry/SCADA RS485 and RS232 MODBUS (see telemetry flyer)			•	●
Telemetry/SCADA 3G Cellular and DNP3 (see telemetry flyer)				•
Email Alarm notifications				•
Remote Diagnostics, pump control and administration				•
FTP support of historical event data transfer				•

• Standard
● Optional
* Available via USB on 1000A

aquatec
aquatec

Remote Capabilities

SCADA

The standard OmniSmart Controller has inbuilt smarts for localised analysis and decision making. It is easily upgradable to become an edge device within your SCADA network by simply inserting a plug in module. This has the benefits of reducing demand on both your network and SCADA servers, improving response times, while still giving you real time operational and management capabilities. As an edge device, the OmniSmart also continues to give you all the benefits of an optimised reticulation network even during loss of communication or SCADA system outages.

SMS/Email

The OmniSmart supports two way SMS communication for fault notification along with remote diagnostics, adjustment and rectification. It can also email faults directly to your job management system to automate ticket issuing and prioritisation. The OmniSmart also has the ability to produce nightly historical exports via email for in-depth reporting and analytics.

File Transfer Protocol (FTP)

The OmniSmart transfers historical events to your FTP site at defined intervals, for automated phasing into your data warehouse. This gives you near real time data for reporting and analytics without the need of a SCADA system. OmniSmart supports CSV, tab delimited, and XML data file formats.

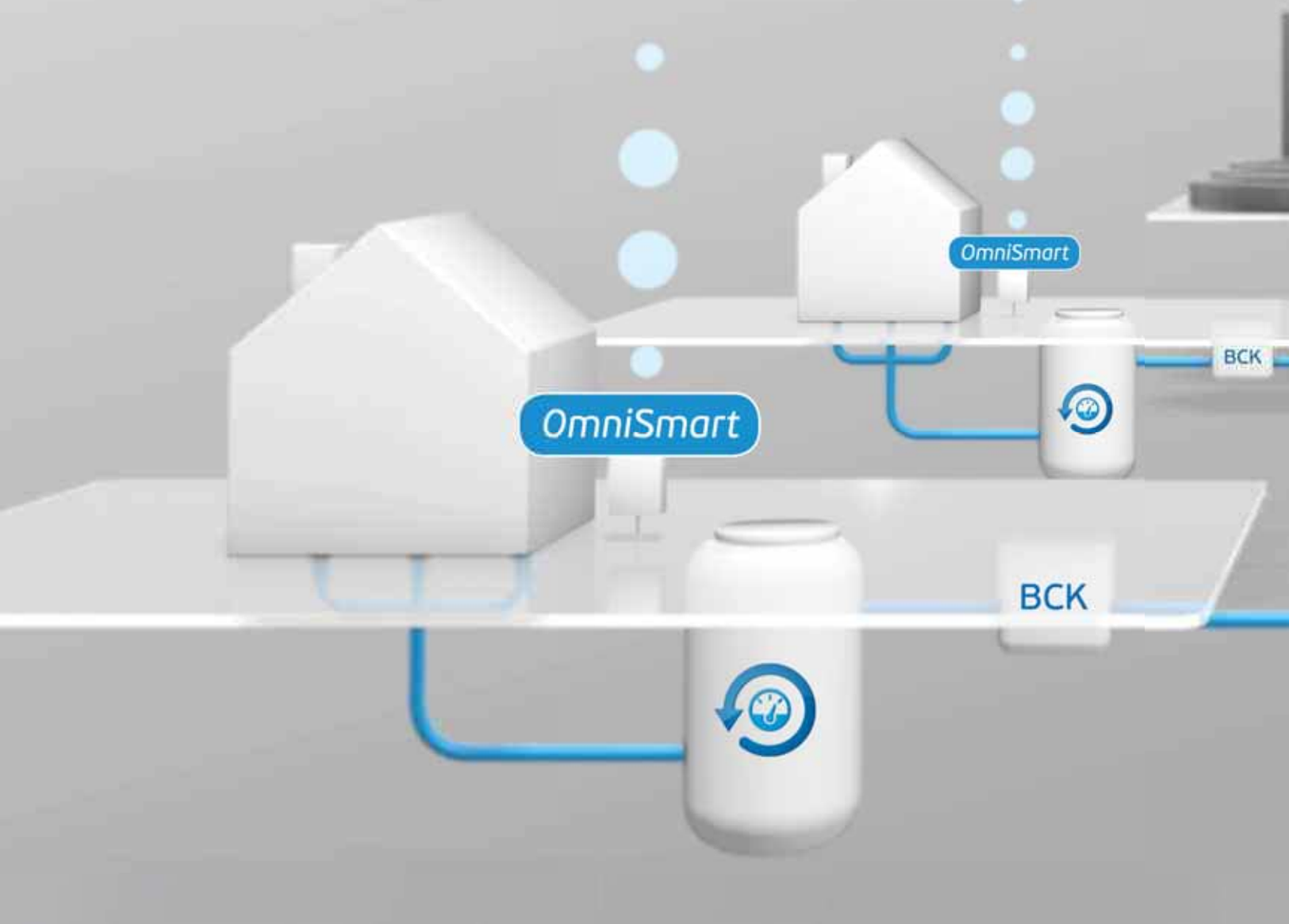

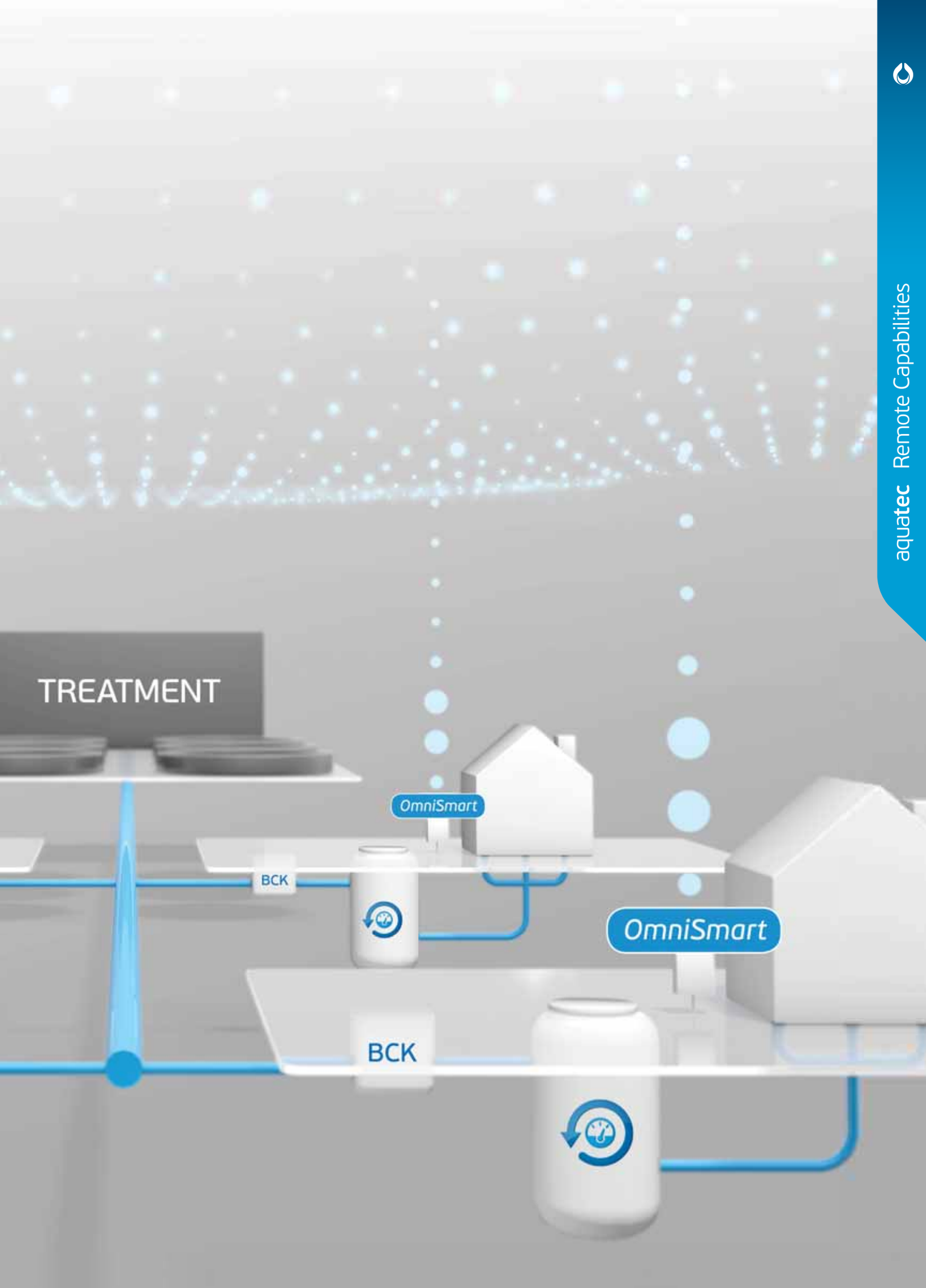
TREATMENT
OmniSmart
BCK
OmniSmart
BCK

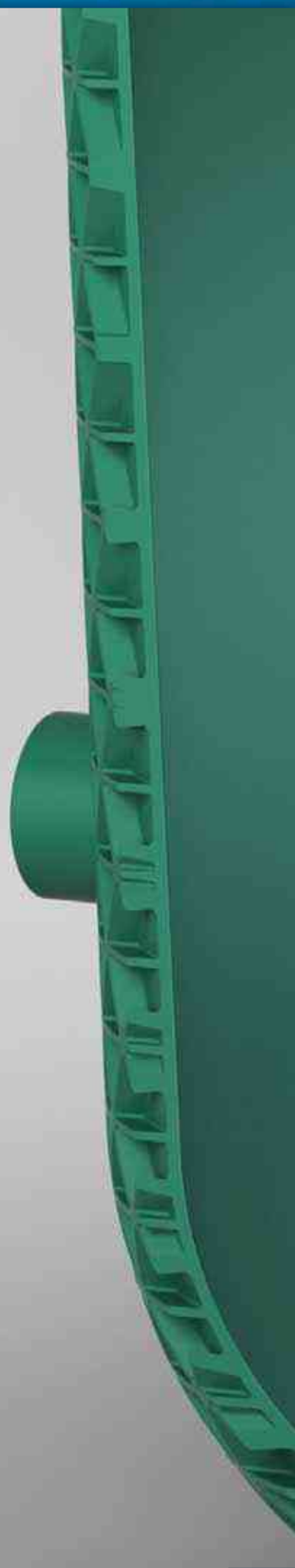

After Sales Service

Service Warranty

Aquatec are committed to providing full after sales service, support and long term warranties on all components.

Technical & Product Support

Australasia – +61 3 5823 4200

System Maintenance Management

Aquatec's nationwide network of accredited maintenance providers cover urban and rural areas with a same day response policy.

Water Innovation Partners

Australia
T 1300 088 555
> aquatecenviro.com

New Zealand
T 08 0075 6543

aquatec

OmniSmart Controller

Water Innovation Partners

T 1300 088 555
> aquatecenviro.com.au
> aquatecenviro.co.nz

The ultimate range in pump control

How our 'Smarts' in OmniSmart Benefit You:

Protects and enhances the life of your pump by:

— Monitoring the motor current and mains voltage to ensure these remain within the safe operating ranges
— Preventing excessive starts and long run times, extending the life of your pump
— Limiting excessive 'idle-time', consequently reducing the potential of seizing and the need for unscheduled maintenance
— Protecting your pump against dry running, thereby preventing damage to pump
— Giving an over pressure protection in case of a blocked pipe or excessive pressures in the reticulation network.

Protects and maintains the reticulation system by:

— Creating daily 'flushing waves' which scour the inside of the pipe, preventing slime build-up and eliminating unnecessary maintenance and potential blockages
— Prioritises operation in a 'controlled' state after power failure, based on the effluent levels in each tank or by staggering 'pre-set' on times, which automatically turns pumps on. This controls the start-up sequence and minimises excessive pressures in the reticulation caused by all pumps starting up together in an 'uncontrolled' state
— Improves flow and minimises retention issues through diurnal (daily) flow modification, by staggering operation and storing effluent in tanks with the flow being metered out on a timed basis
— Over pressure protection to prevent damage to pipework, joins, and valves.

Our promise is to save you costs by:

— Being able to upgrade and/or reconfigure the OmniSmart in the future if your requirements or desires change
— Having the ability to diagnose faults and correct them remotely without attending site
— Giving you event history to help identify problems or long-term trends such as additional water costs through leaking taps etc.
— Giving you the choice to only operate at designated periods of the day, to provide you the ability to:
    a. Choose a cheaper power tariff (time of day) or self-consuming solar power alternative
    b. Avoid downstream infrastructure upgrades due to capacity issues - all of which has to be funded.

OmniSmart Feature Matrix

Features	*500*	*1000A*	*1000B*	*6000A*	*6000B*	*6000C*
Certified to all Australian and New Zealand Standards	•	•	•	•	•	•
Key lockable IP66 polycarbonate enclosure	•	•	•	•	•	•
Backing plate for easy mounting on wall or post	•	•	•	•	•	•
90Db audible alarm with automatic mute	•	•	•	•	•	•
External mute button for audible alarm	•	•	•	•	•	•
Single Pump Control	•	•	•	•	•	•
High-level alarm (low voltage) LED strobe light	•	•	•	•	•	•
Automatic and manual pump modes	•	•	•	•	•	•
Microprocessor based operation with upgradeable firmware	•	•	•	•	•	•
LED system status indication	•	•	•	•	•	•
Compatible with level switches or hydrostatic transducer	+	•	•	•	•	•
Back up high level switch compatible	•	•	•	•	•	•
Adjustable Over Pressure Protection	•	•	•	•	•	•
Motor current monitoring and protection for both low and high amps	+	•	•	•	•	•
Brown out/Low voltage protection		•	•	•	•	•
High voltage protection		•	•	•	•	•
Real time Clock (date and time)		•	•	•	•	•
Pump protection from Anti-seize, excessive run time and motor starts		•	•	•	•	•
Adjustable pump and alarm activation points		•	•	•	•	•
Adjustable Alarm delays		•	•	•	•	•
Internal memory with status history (last 4000+ events including motor state, adjustable fluid levels granularity, configurational changes and alarms)		•	•	•	•	•
USB Plug and Play administration interface and history		•	•	•	•	•
SCOP Compatible for improved system health and diurnal curve flattening.		•	•	•	•	•
Controller behaviour and activation based on time of day		•	•	•	•	•
Adjustable start delay after power failure based on fluid levels		•	•	•	•	•
Automatic scouring, time delay, and storage modes		•	•	•	•	•
Output to control external devices		•	•	•	•	•
Battery Backup for Alarms, fluid levels, history, and telemetry/SMS.		●	•	•	•	•
Hours run and pump start counter *		*	•	•	•	•
Backlit LCD screen for system status, diagnostics and liquid level			•	●	●	●
Telemetry/SCADA RS485 and RS232 MODBUS				•	●	●
Telemetry/SCADA 3G Cellular and DNP3					•	●
Telemetry/SCADA WiFi/Ethernet and DNP3						•
SMS notifications, remote diagnostics, pump control and set point control/ adjustment					•	●
Email Alarm notifications					•	•
FTP support of historical event data transfer					•	•
LPWAN/IoT Integration				●	●	●

Note: Designed for use with most technology manufacturers' equipment (retrofittable)

• Standard
● Optional
* Available via USB on 1000A
\+ Level switches and high amp protection only

Driving innovation

"We are living in a world which is becoming more and more connected, with the vast majority of homes globally having access to the internet. The IoT (Internet of Things) is opening up functionality which has previously only been allocated to big SCADA platforms and large Water Authorities, due to the cost and complexity of infrastructure. Now, the value proposition for councils, developers, body corporates, and even home owners themselves has increased through IoT. With IoT's ability to receive fault notifications and provide performance analytics from assets to gain system efficiencies, reduce maintenance costs and provide remote visibility, it has become a simple and affordable reality."

Bruce Seeley
CEO, Aquatec

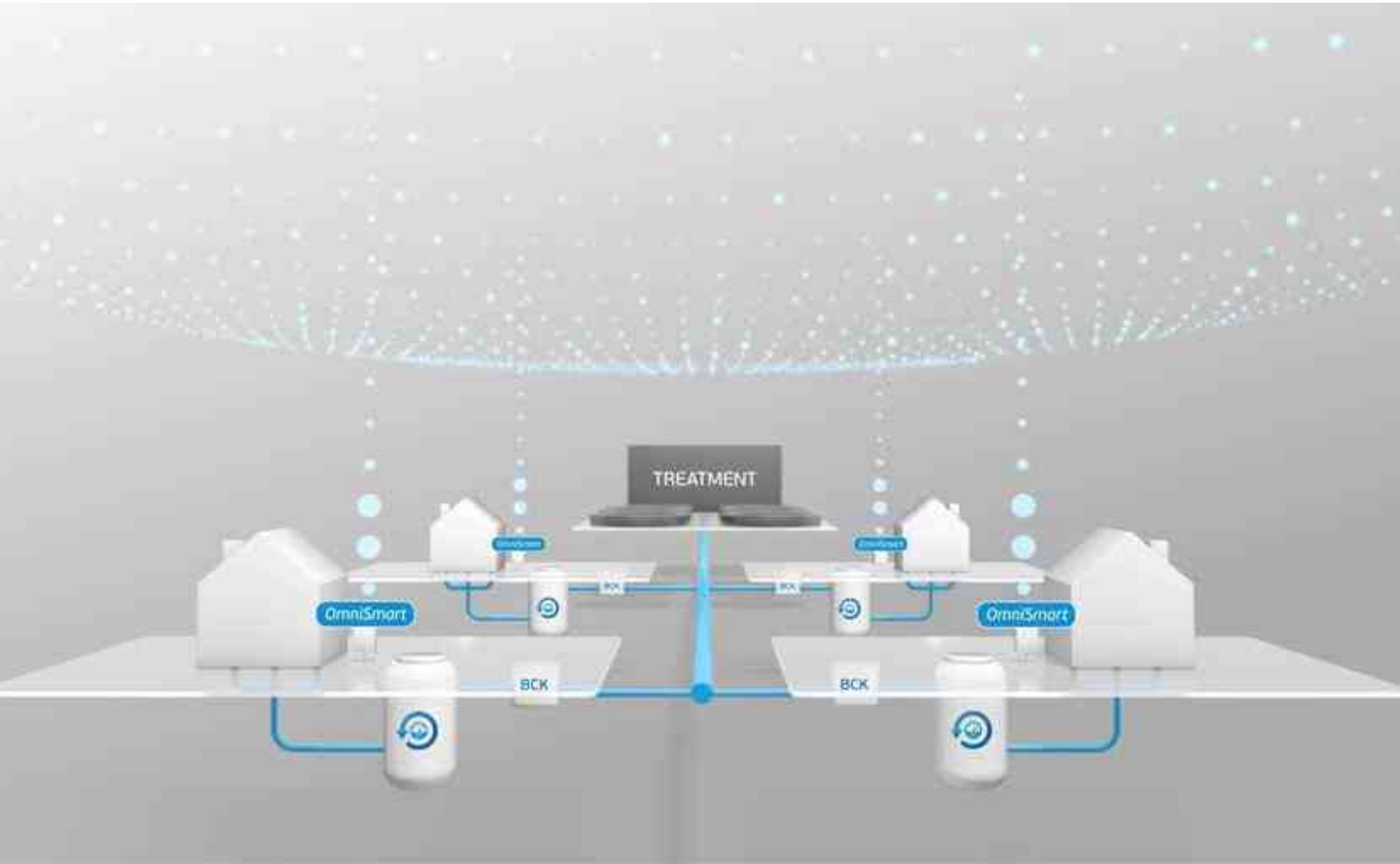

Flexibility

Upgrades

Aquatec's OmniSmart controller is adaptable to suit the requirements of any project. This includes the ability to be upgraded to replace existing control panels within a sewer network, which may be failing or do not provide an upgrade path for the asset owner.

Firmware

The OmniSmart's firmware is fully configurable in every way. As your needs change over time, new firmware can be loaded to support additional functionality and hardware modules. As settings are locally saved, communications failure does not affect operation.

Cellular Modem

The addition of a cellular modem (via a simple plug-in card) allows the OmniSmart to directly connect to the internet or a Corporate WAN (Wide Area Network). Furthermore, this enables the OmniSmart to SMS alerts to you if there is ever an issue, while allowing you to SMS instructions or changes to the unit.

WiFi

The OmniSmart's optional WiFi module can connect to a local WiFi access point, to send fault notifications and receive instructions or updates remotely. This may be through the connected home or another network within range.

Ethernet

The OmniSmart Ethernet module allows a physcial wired connection to a network or the internet. This gives higher reliability in areas of poor wireless connection for example, or where you wish to connect it to a fibre modem.

Remote Capabilities

SCADA

The standard OmniSmart Controller has inbuilt 'smarts' for localised analysis and decision making. It is easily upgradable to become an edge device within your SCADA network by simply inserting a plug-in module. This has the benefits of reducing demand on both your network and SCADA servers, improving response times while still giving you realtime operational and management capabilities. As an edge device, the OmniSmart also continues to give you all the benefits of an optimised reticulation network, even during loss of communication or SCADA system outages. The OmniSmart also supports remote upgrade of its firmware via DNP3.

Internet of Things (IoT)

The OmniSmart can connect to a LPWAN (Low Powered Wide Area Network) base station many kilometres away, to send notifications of fluid level changes and/or issues onsite. This data is then on-forwarded to a secure IoT platform in the cloud, which can be fed into your SCADA system via DNP3 as if it were a traditional RTU.

SMS/Email

The OmniSmart supports two way SMS communication for fault notification along with remote diagnostics, adjustment and rectification. It can also email faults directly to your job management system to automate ticket issuing and prioritisation. The OmniSmart also has the ability to produce nightly historical exports via email for in-depth reporting and analytics.

File Transfer Protocol (FTP)

The OmniSmart transfers historical events to your FTP site at defined intervals, for automated phasing into your data warehouse. This gives you near real time data for reporting and analytics without the need of a SCADA system. OmniSmart supports CSV, tab delimited, and XML data file formats. The OmniSmart also supports remote upgrade of its firmware via FTP.

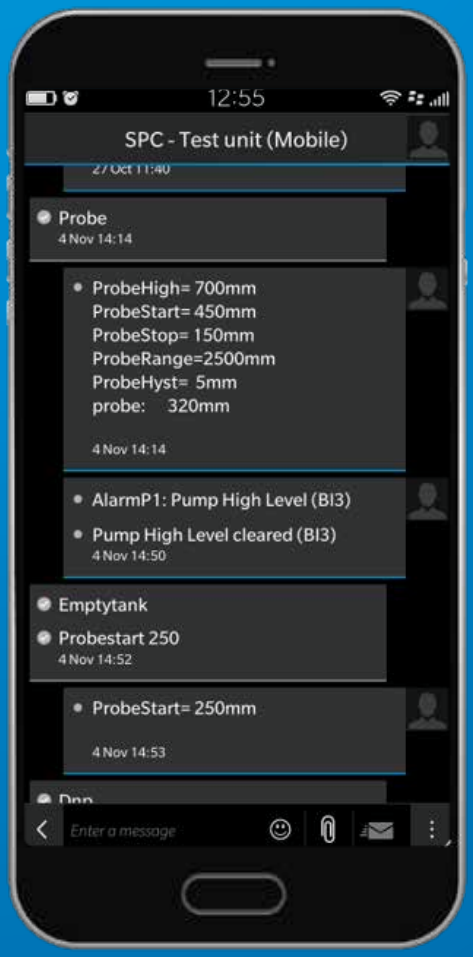

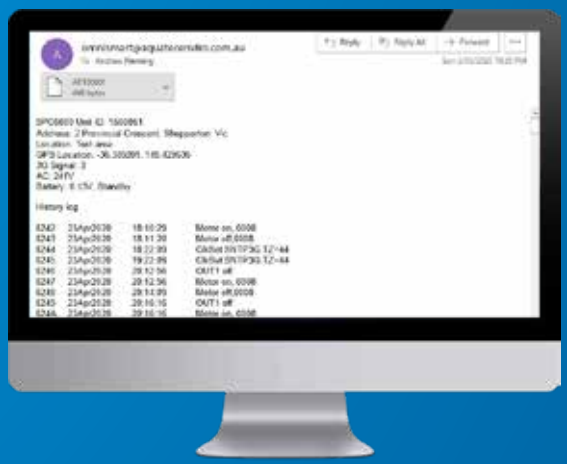

OmniSmart Multi Pump Controllers

As part of our product innovation and development, Aquatec have utilised the ground-breaking OmniSmart technology to incorporate multiple pump control for commercial and industrial applications. This includes the Duplex, Triplex and Quadplex pump control systems. In fact, the OmniSmart Multi is capable of operating up to five pumps in single or three phase, up to a maximum of 60 Amps per pump.

The OmniSmart Multi has evolved and advanced from the Simplex (single pump) control panel hardware, in order to leverage the same level of intelligence and expandability, and is cross-compatible with any single pump controller in an existing sewer network. As with the Simplex version, the OmniSmart Multi provides a seamless upgrade path to accommodate future requirements for telemetry or 'smart' functions.

The OmniSmart Multi controller includes:

- Individual Auto/Off/Manual switches
- Pump Current Sensing per phase, and phase failure detection
- Pump-specific Over Pressure Protection
- Ability to be supplied as a free-standing switchboard with mains metering functionality
- Numerous pump exercising algorithms to give multiple options for pump selection, such as duty/standby, pump prioritisation, longest idle time, total number of starts, total run hours etc.
- Compatibility with all types of level controls
- Configurable inputs for pump faults, such as thermal or moisture ingress detection
- Pump protection from lock rotor, excessive run time and excessive motor starts
- Backlit LCD screen for system status, fault diagnostics and liquid level visualisation
- USB Plug and Play administration interface and history

Water Innovation Partners

T 1300 088 555
> aquatecenviro.com.au
> aquatecenviro.co.nz

Installation Manual

Duplex

For Series: OGT & OGP (240v Single Phase) Pumps with OmniSmart Dual Controller

As a result of Aquatec Fluid Systems constant product improvement program, product changes may occur. As such Aquatec Fluid Systems reserves the right to change product without prior written notification.

Please note
Read all instructions in this manual before operating.

Water Innovation Partners

Australia 1300 088 555
New Zealand 0800 756 543
> aquatecenviro.com

Last Reviewed: March 2022

User Guide

Congratulations on your purchase of an Aquatec Low Pressure Grinder Pump System. With proper care and by following a few simple guidelines your grinder pump will give you many years of dependable service.

Use and Care

The Low Pressure Grinder Pump Station is designed to handle routine, domestic sewage. Solid waste materials should be thrown in the trash. While your station is capable of accepting and pumping a wide range of materials, regulatory agencies advise that the following items should not be introduced into any sewer either directly or through a kitchen waste disposal:

- Glass
- Metal
- Shells or Sand
- Nappies
- Socks, rags or cloth
- Plastic objects (e.g. toys, utensils, etc.)
- Sanitary napkins or tampons
- Kitty litter
- Baby wipes

In addition you must **never** introduce into any sewer:

- Explosives / flammable material
- Lubricating Oil and/or Grease
- Strong Chemicals
- Gasoline/diesel
- Paint
- Rainwater

General Information

Your home wastewater disposal service is part of a Pressure Sewer System. The key element in this system is the Aquatec Low Pressure Grinder Pump Station. The chamber collects all wastewater from the house. The solids in the sewage are then ground to a small size suitable for pumping in the slurry.

The grinder pump generates sufficient pressure to pump this slurry from your home to the wastewater plant or point of discharge.

Power Failure

Your grinder pump cannot dispose of wastewater or provide an alarm signal without electrical power (unless your controller has a battery backup option). If electrical power service is interrupted, keep wastewater usage to a minimum.

Warranty

Your grinder pump is furnished with a warranty against defects in material or workmanship. A properly completed Start Up/ Warranty Registration form must be on file at the Aquatec factory in order to activate your warranty. In addition your pump must be installed in accordance with the installation instructions.

If you have a claim under the provisions of the warranty, contact your local Aquatec pump distributor.

When contacting your representative for service, please include your pump model number, and pump serial number.

For future reference, record the following information:

PUMP MODEL NO: _____

PUMP SERIAL NO: _____

LOCAL CONTACT: _____

TELEPHONE: _____

Safety First

Only qualified personnel should install, operate and repair the pump. Any wiring of pumps should be performed by a qualified electrician.

DO NOT leave pump cover off the pump chamber, except while servicing, to prevent entrance of foreign materials such as rocks, metal, soil, animals or humans. Prevent infiltration or direct flow of rain or run-off water into the pump chamber to minimise pump cycling. This will prevent overloading the treatment facility, and will facilitate swift transportation of sewage.

To reduce risk of electrical shock, pumps and control panels must be properly earthed in accordance with the local power authority requirements and all applicable state and local codes and ordinances.

To reduce risk of electrical shock, always disconnect the pump from the power source before handling or servicing. Lock out power and tag.

During power black-outs, minimize water consumption at the home(s) to prevent sewage from backing up into the house. Always keep the shut-off valve completely open when the system is in operation (unless advised otherwise by the proper authorities). Before removing the pump from the chamber, be sure to close the shut-off valve (this prevents backflow from the pressure sewer).

Keep the control panel locked or confined to prevent unauthorized access to it.

If the pump is idle for long periods of time, it is advisable to start the pump occasionally by adding water to the chamber.

Keep clear of suction and discharge openings. DO NOT insert fingers in pump with power connected.

Always wear appropriate safety gear, such as safety glasses, when working on the pump or piping.

Cable should be protected at all times to avoid punctures, cuts, bruises and abrasions – inspect frequently.

Never handle connected power cords with wet hands.

To reduce risk of electrical shock, all wiring and junction connections should be made per local power authority requirements and applicable state and local codes. Requirements may vary depending on usage and location.

Products returned must be cleaned, sanitized and decontaminated as necessary prior to shipment to ensure that employees are not exposed to health hazards in handling such material. All applicable laws and regulations shall apply.

IMPORTANT! Aquatec Fluid Systems is not responsible for losses, injury, or death resulting from a failure to observe these safety precautions, misuse of pumps or equipment.

Installation

IMPORTANT:

Please note, if any part of your system differs from this manual i.e. trafficable cover - please contact Aquatec for further assistance.

Read this manual completely before starting your installation.

Before you begin.

- Consult local officials for any applicable codes and regulations.
- Determine the best location for your basin and control panel (see Figure. 1)
- Minimize the use of elbows on the inlet line. If required only use 45° elbows.
- Plan your installation location carefully to insure a minimum 1:80 drop on the inlet line while staying within the allowable inlet zone.
- Determine where the incoming power will be supplied from and if it can handle the rated load for your pump station.
- Mount control panel in accordance with electrical codes and where alarm light can be easily seen.
- The control panel must be positioned within 10m of the pumping station to allow for conection of standard pump and level control cables supplied with the unit.
- Obtain all necessary permits. Call your local relevant authorities before digging to locate all underground lines and cables.
- Make sure you have the necessary equipment and supplies before starting your installation.
- Determine the ballast requirements for your particular basin size (see page 6).
- Use the electrical requirments specified in Chart 1.

Chart 1 — Electrical Cable Requirements (The following chart is based on max run length of 25 meters)

OGT System	Minimum Supply	Dedicated 240v single phase circuit with 32 Amp supply at the pump
OGP System	Minimum Supply	Dedicated 240v single phase circuit with 40 Amp supply at the pump

Chart 2 — Inlet Specification Uniseal Option

Inlet Pipe Size	Hole Saw Size	Flexible Inlet Size
100 mm DWV 00114	127 mm	100 mm
150 mm DWV 00160	178 mm	150 mm
Aussie Seal Option		
100 mm	Not Applicable	Aussie Coupler Supplied

Conduit/Uniseal Size

Conduit Size	Uniseal Size	Hole Saw Size
25 mm	20 mm	31.7 mm
32 mm	25 mm	44.4 mm
40 mm	32 mm	50.8 mm
50 mm	40 mm	63.5 mm

Location of Pump Chamber and Control Panel for Remote Mounted Controls

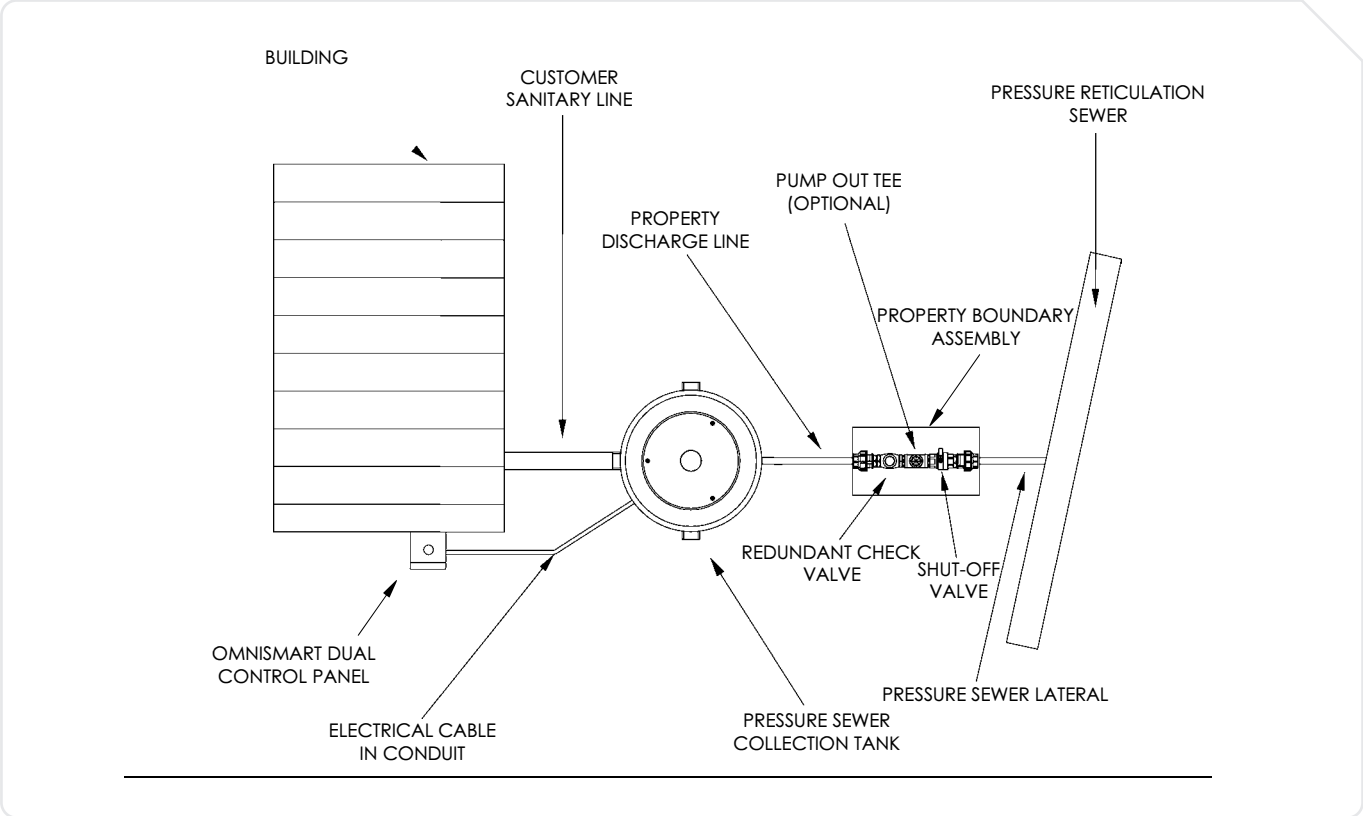

Figure 1: Plan View of Installation/Components

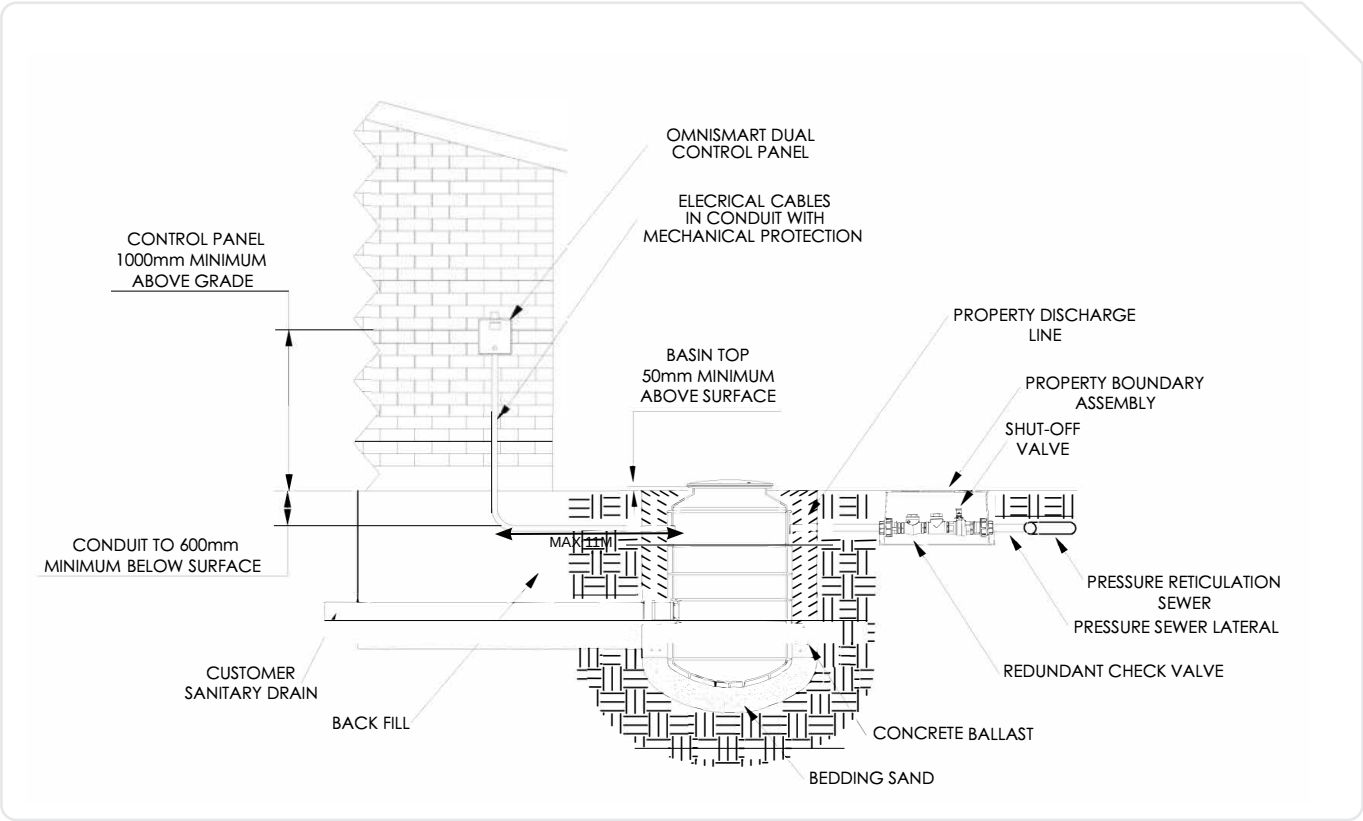

Figure 2: Front Elevation of Installation/Components

STEP 1.

Excavation & Backfill Requirements

1. Refer to Table 1 below for excavation depth.
2. Concrete slurry to be used in clay areas and/or in high ground water applications.
3. Backfill around chamber with suitable site won or imported material, compacted in max. 300mm layers, or backfill with screenings or equivalent self-compacting material, or with blinding concrete.

Table 1: Tank and Excavation Details

Model	Tank Volume (L)	Nominal Tank Height (mm)	Tank Weight (kg)	Excavation Depth (mm)
620L	620	1000	35	1050
1100L	1100	1600	55	1650
1500L	1500	2200	75	2250

Concrete Ballast Requirements for all tank models

1. Based on a standard excavation diameter of 1440mm, the concrete ballast shall be no less than:
   - 0.184m3
   - 441kg
   - 200mm thick
2. Concrete ballast shall be kept clear from Inlet connection and pipework (refer Figure 1).

Class A Light Duty installations only. (For Class B or D consult Aquatec as ground conditions may affect backfill requirements)

Figure 1: Excavation, Backfill & Concrete Ballast Requirements

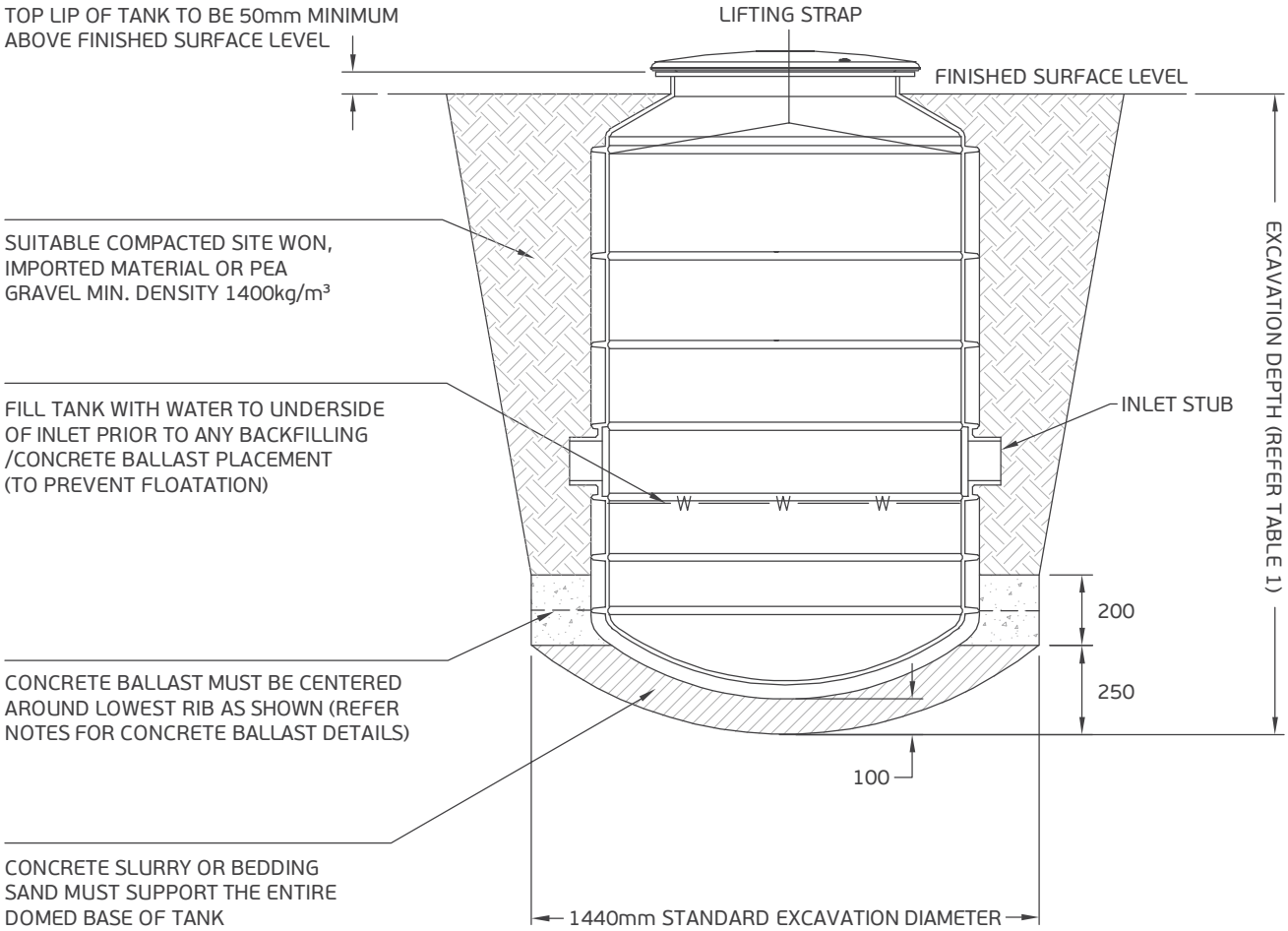

STEP 2.

Discharge Connections & Backfill to Inlet Depth

Steps & Tips:

- Make sure the required check valve is installed in the correct direction. Flow arrow should point away from the pump chamber and **must be installed in a horizontal position.**

- A shut off valve must be installed between the Pressure Sewer Lateral and redundant check valve.

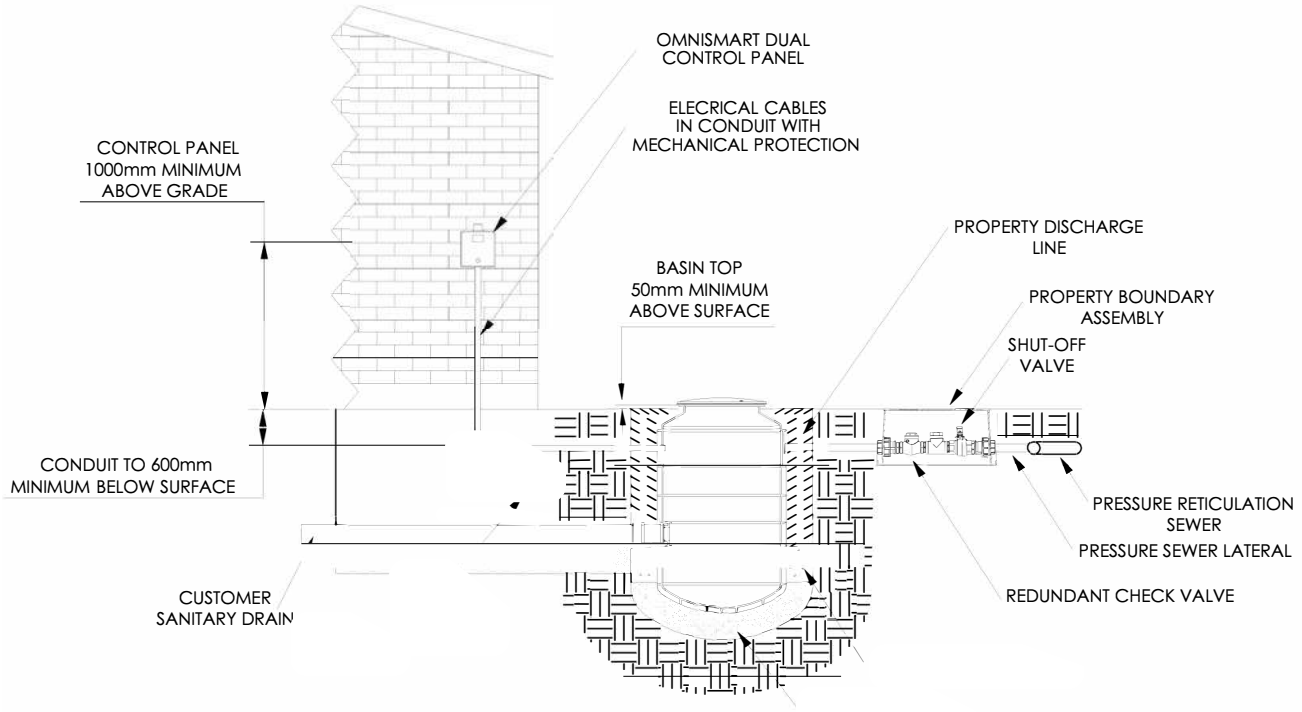

Figure 4: Discharge Connections & Backfill

STEP 3.

Running Cable from Pump Chamber to Alarm or Control Panel

Steps & Tips:

- Select a visible location that is less than 11 meters from the pump chamber. The system comes with 15 meter cables by default. If a suitable location is not within this radius, then longer cables can be ordered, or the control panel can be pole mounted.
- All penetrations through the pump chamber must be sealed watertight.
- Inlet not yet connected – shown for reference only.
- Leave approximately 2 metres of cable inside the pump chamber to allow pump removal for maintenance.

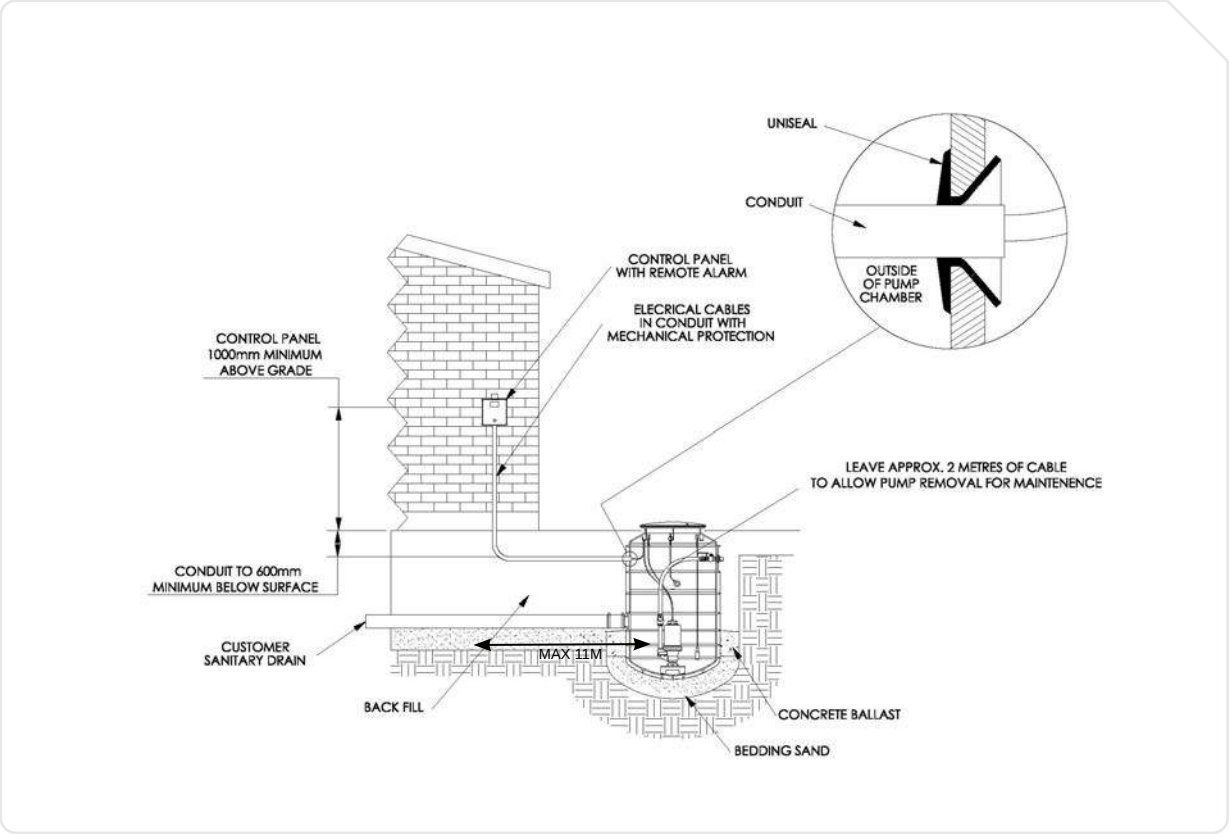

Please note: The control panel must be mounted at least 1 metre above the ground level or the high water mark in flood prone areas.

STEP 4.

Mounting Plate

- The control panel is supplied with a mounting plate to simplify installation, and provide further protection from water ingress. It comes with pre-countersunk screw locators which must be used so that the screw heads do not interfere with the mounting process.
- If pole mounting, use the centre 5 locators (as per diagram), otherwise any of the outer ring of locators can be used for wall mounting.

Installing Glands

- Once the mounting plate has been correctly fixed to wall or pole, the control panel can be temporary put in place to choose appropriate gland locations for power, pump, and level controls. While the control panel isn't permanently fixed to the mounting plate, please make sure that it is physically held in place, so that it doesn't fall off and become damaged. Penetrations are NOT to be made into the control panel other than through the protected underneath section as per the below example.
- Once gland locations are chosen, take off the backing plate and drill. Once gland holes have been created, clean out any plastic debris being careful not to damage any internal wiring or components and firmly install glands.
- Do not connect conduit directly to controller. Use a cable gland with minimum 100mm AR Gap between conduit and controller.

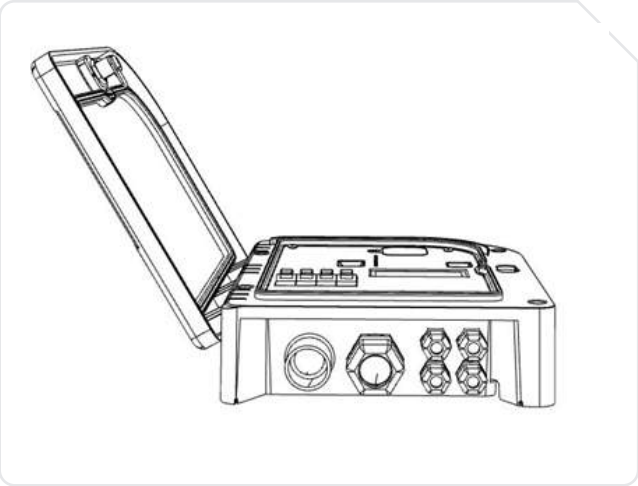

Fixing Control Panel to Mounting

- After the glands have been installed, the controller can now be permanently fixed to the mounting plate. This is done by siding the controller onto the mounting plate, and then screwing into place via the 4 supplied screws around the outside edge. Please refer to picture.

STEP 5.

Level Controls

Steps & Tips:

- Remove assemblies from box.
- Hang level controls from hooks inside tank.
- Connect level controls as required.

E.S.P.S ENVIROMENTALLY SEALED PRESSURE SWITCH

- Quick connect Electrical Plug
- Slide down Guide rail (guide rail option)
- Hang E.S.P.S from hook (free standing option)

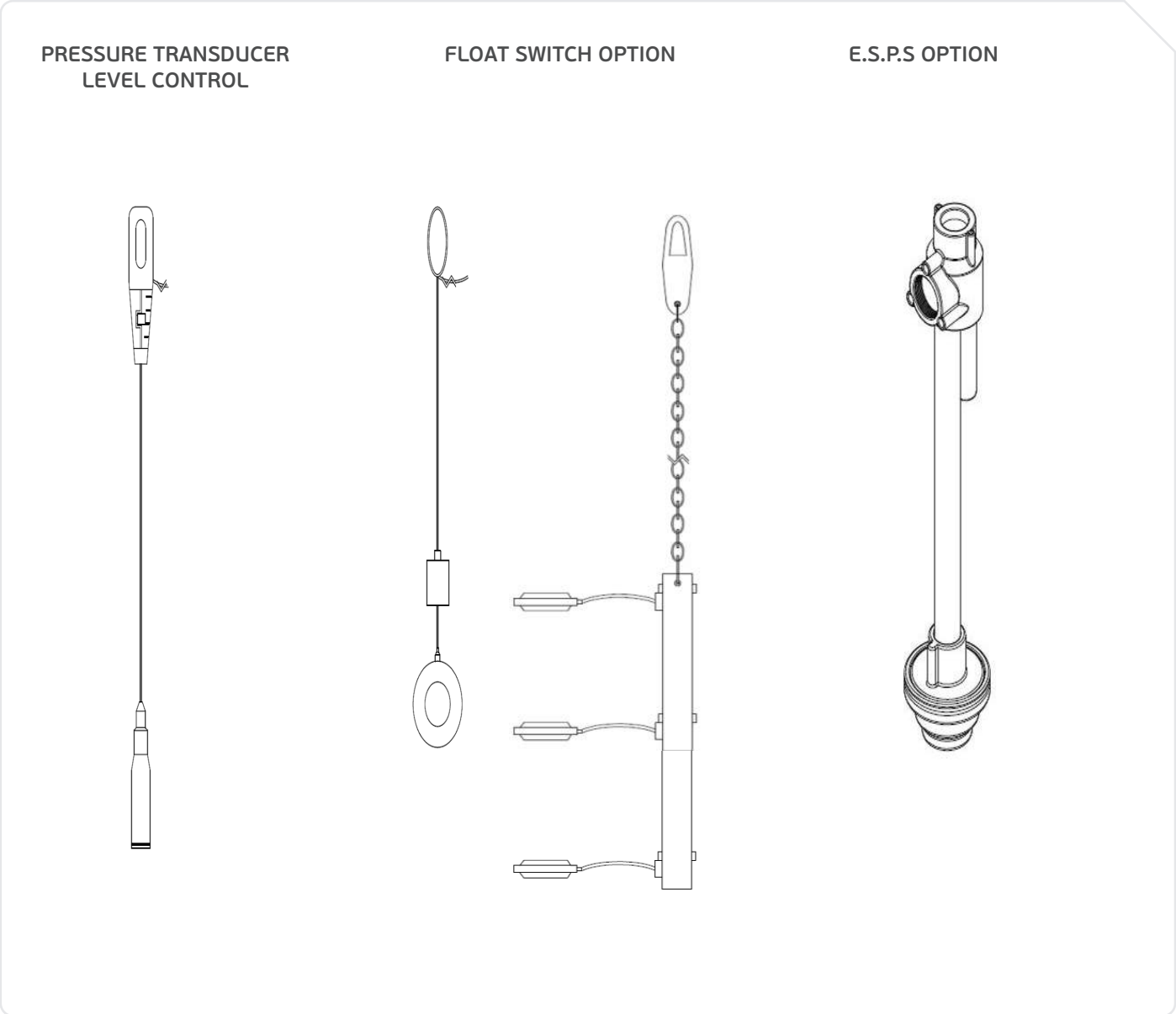

Figure 11: Level Control Options

STEP 6a.

Level Control Options

- The following 4 level control options are to be selected via Dip Switch settings (SW1).

Internal Level Control – Differential (ILC-Diff Mode)

Power to motor is constantly on (24x7) and the levels are not controlled via OmniSmart. The OmniSmart monitors backup high level alarm via BI-4 to trigger strobe and buzzer.

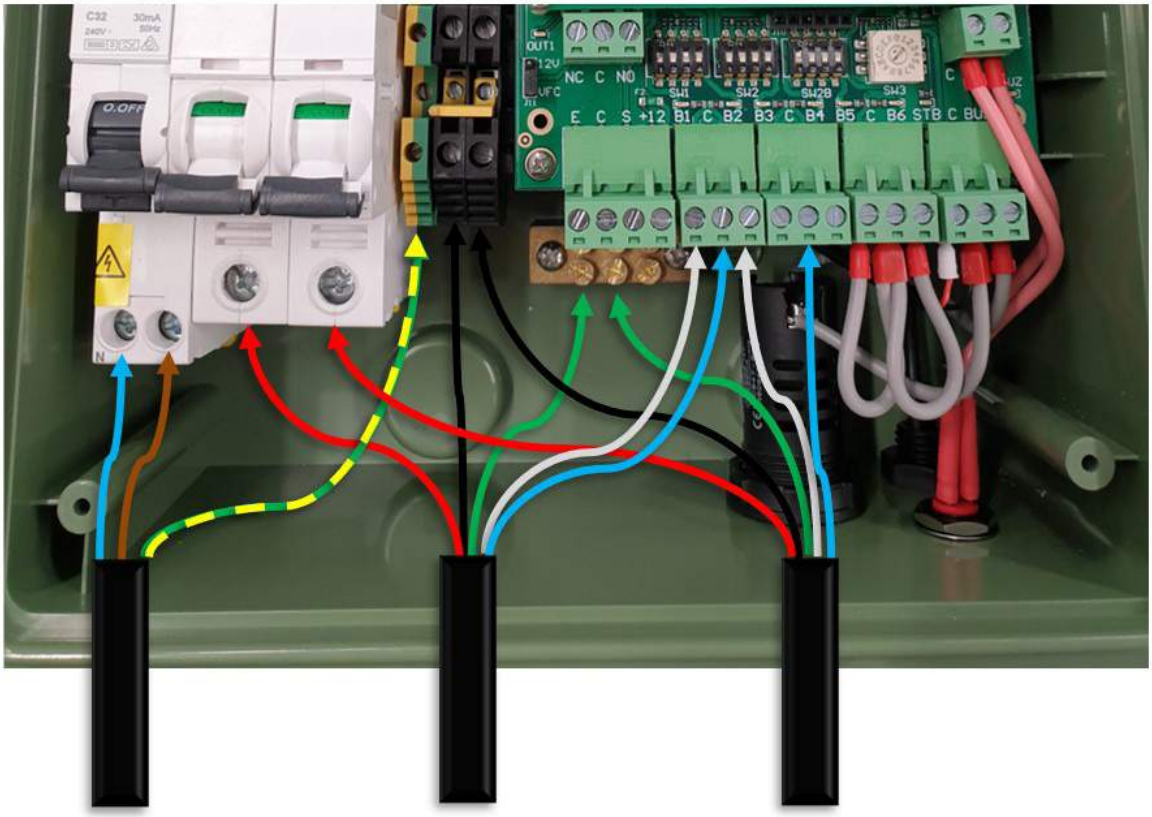

Mains Supply
240VAC 50Hz

Pump 1
Red - Active
Black - Neutral
Green - Earth
White – B1
Blue - C
Orange – Not used

Pump 2
Red - Active
Black - Neutral
Green - Earth
White – B2
Blue - C
Orange – Not used

Please Note:

- Use individual cable glands instead of conduit glands to isolate from sewer gases.
- Wiring pictured above is for the Aquatec 6 pin pump with 6 core pump cable and inbuild level switches (P/N 145418A), operated by the pump (ILC-D). For all other configurations and mains supply wiring requirements, please refer to installation manual.

STEP 6b.

External Level Control – Differential (ELC-Diff Mode)

Power to motor is controlled via OmniSmart by monitoring differential switch (BI-1). OmniSmart turns motor on when BI-1 closes and turns it off when BI-1 opens. High level alarm is monitored via BI-4.

Internal Level Control – Differential (ILC-Diff Mode)

Power to motor is constantly on (24x7) and the levels are not controlled via OmniSmart. The OmniSmart monitors and current draw to determine when the pumps are running as well as the backup High level Alarm via BI-4 to trigger strobe and buzzer.

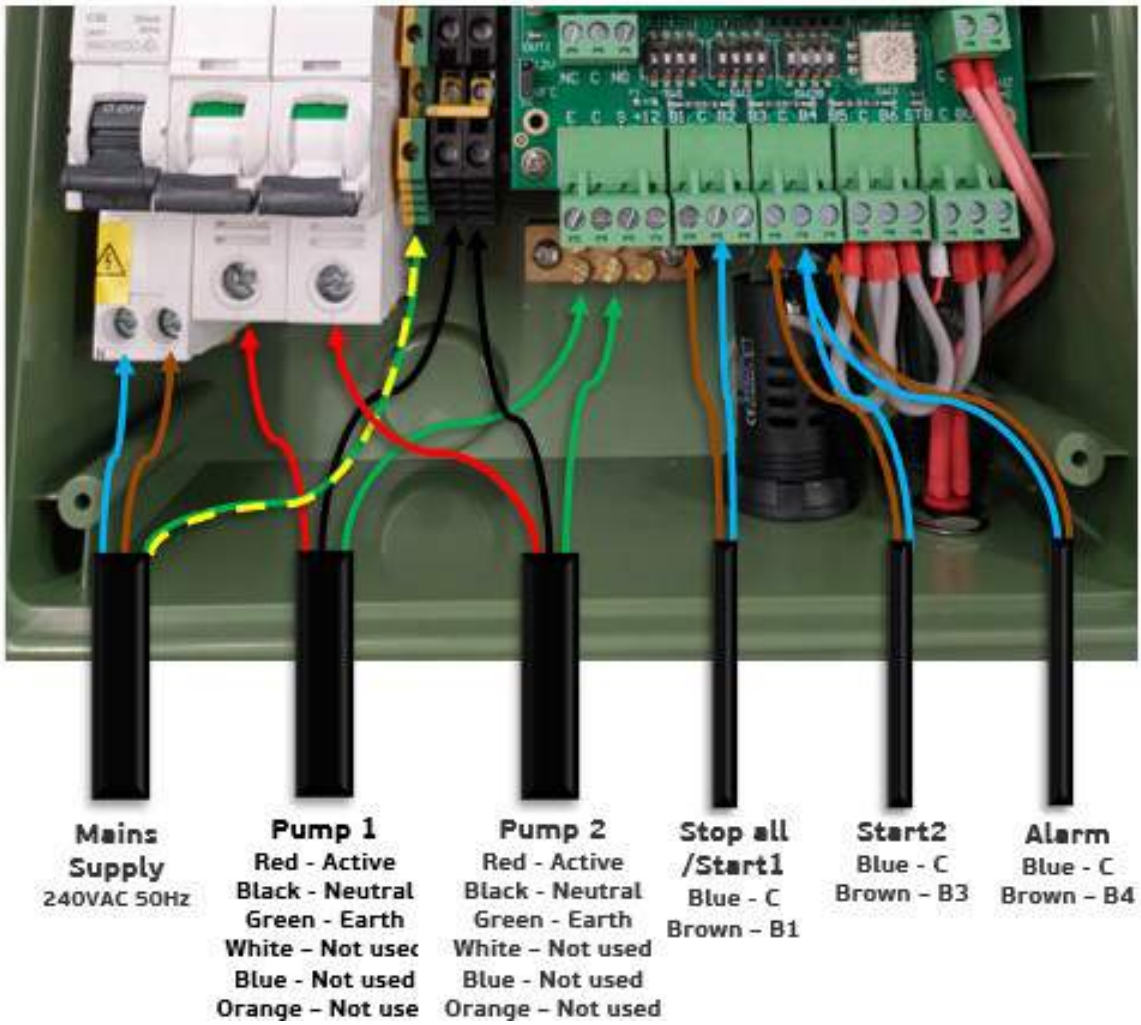

Please Note:

- Use individual cable glands instead of conduit glands to isolate from sewer gases.
- Wiring pictured above is for the Aquatec 6 pin pump with 6 core pump cable and three float assembly tree, operated by the dual control panel (ELC-D). For all other configurations and mains supply wiring requirements, please refer to installation manual.

STEP 6c.

External Level Control – Individual (ELC-Ind Mode)

Power to motor is controlled via OmniSmart by monitoring start (BI-2) and Stop (BI-1) switches. OmniSmart turns motor on when BI-2 closes and even though BI-2 opens it only turns motor off when BI-1 opens. High level Alarm is monitored via BI-4.

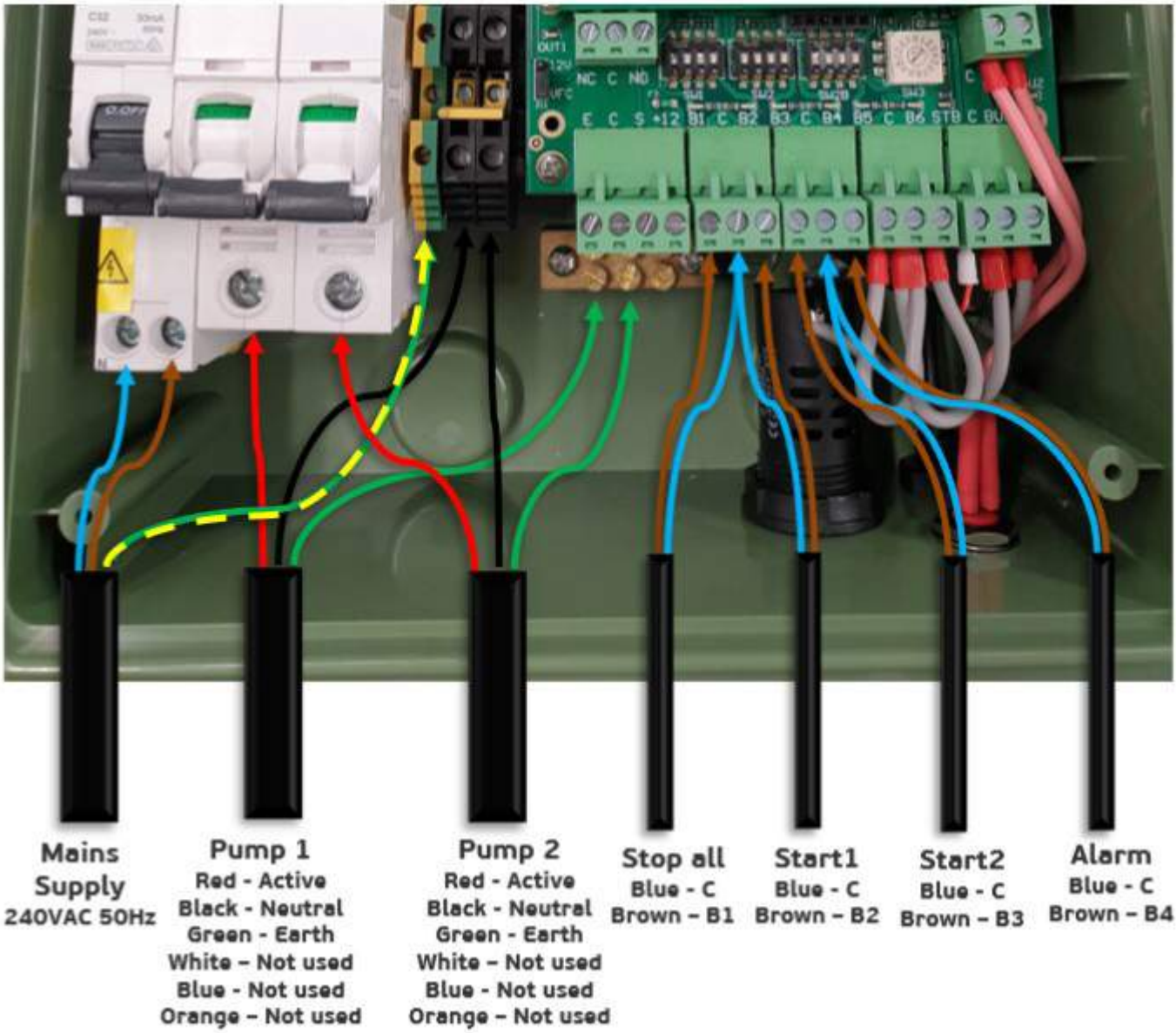

Please Note:

- Use individual cable glands instead of conduit glands to isolate from sewer gases.
- Wiring pictured above is for the Aquatec 6 pin pump with 6 core pump cable and four float assembly tree, operated by the control panel (ELC-I). For all other configurations and mains supply wiring requirements, please refer to installation manual.

STEP 6d.

External Level Control – Transducer (ELC-Trans Mode)

Power to motor is controlled via OmniSmart by monitoring set points on transducer (AI-1). OmniSmart turns motor on when AI-1 is greater than or equal to “ProbeStart” and turns it off when less than or equal to “ProbeStop”. Back up High level Alarm is monitored via BI-4.

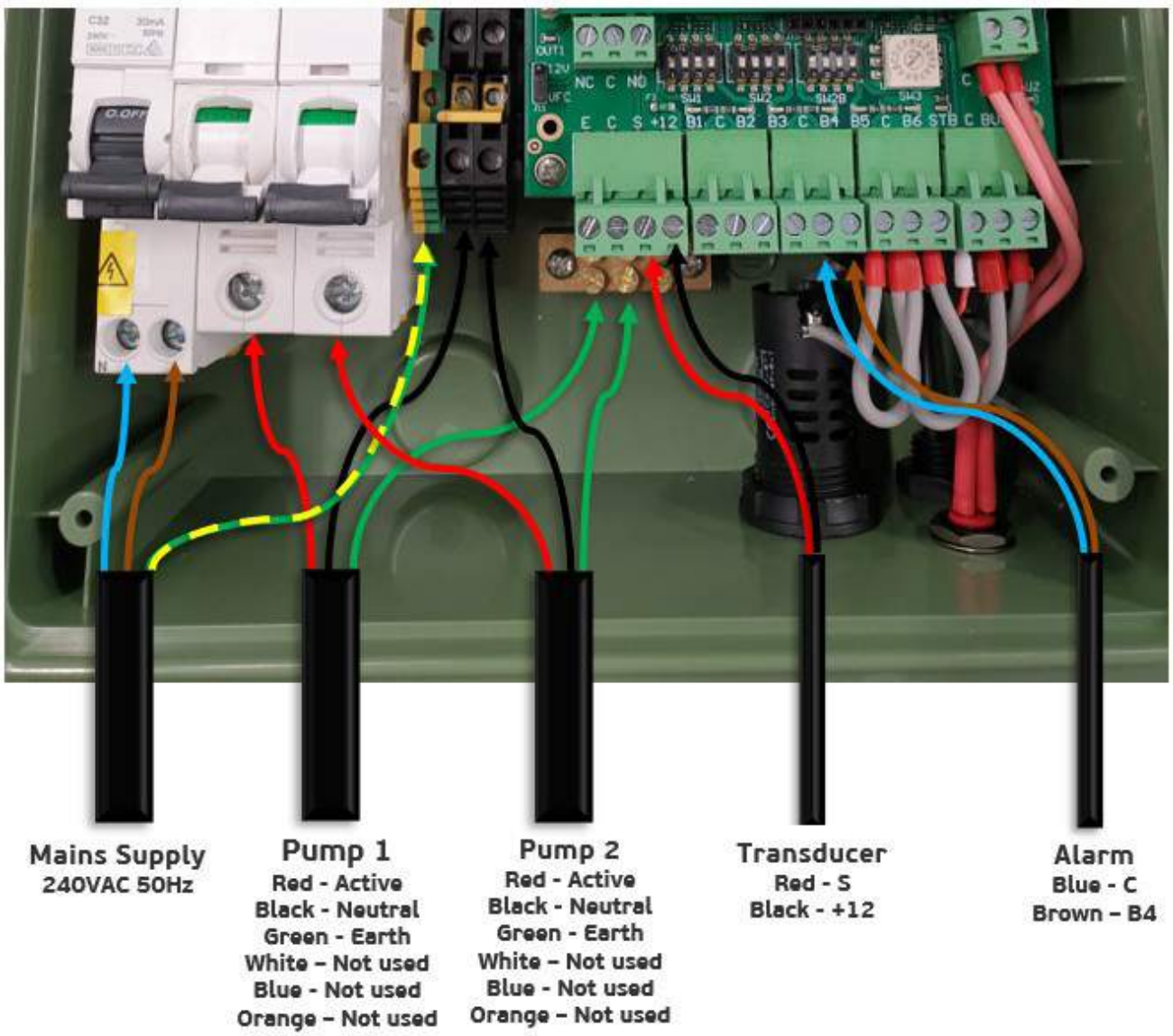

Please Note:

- Use individual cable glands instead of conduit glands to isolate from sewer gases.
- Wiring pictured above is for the Aquatec 6 pin pump with 6 core pump cable and transducer level control (4-20mA), operated by the control panel (ELC-T 20). For all other configurations and mains supply wiring requirements, please refer to installation manual.

STEP 6e.

External Level Control – Transducer (ELC-Trans Mode)

Power to motor is controlled via OmniSmart by monitoring set points on transducer (AI-1). OmniSmart turns motor on when AI-1 is greater than or equal to “ProbeStart” and turns it off when less than or equal to “ProbeStop”. Back up High level Alarm is monitored via BI-4.

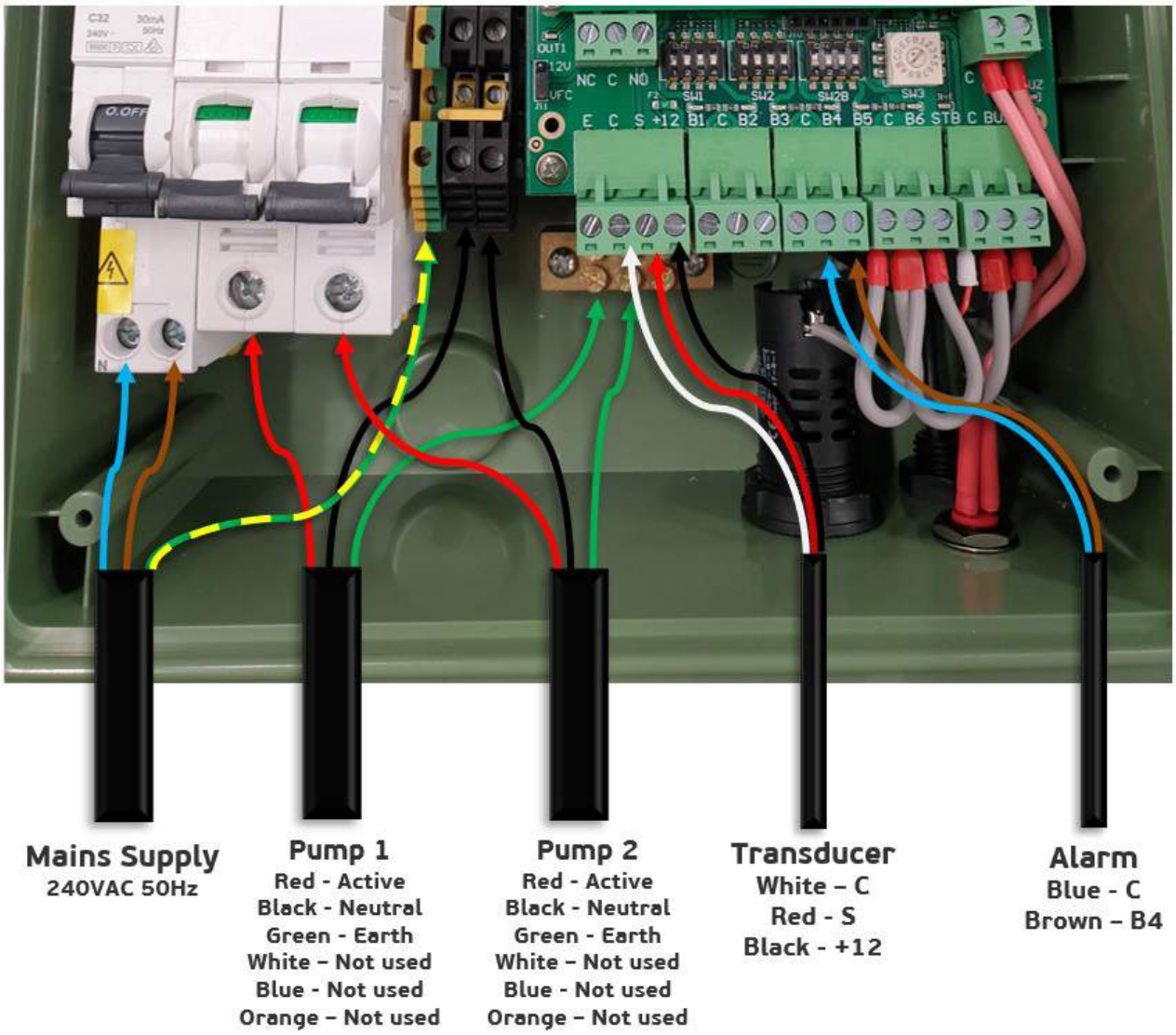

Please Note:

- Use individual cable glands instead of conduit glands to isolate from sewer gases.
- Wiring pictured above is for the Aquatec 6 pin pump with 6 core pump cable and transducer level control (0-5v), operated by the control panel (ELC-T 05). For all other configurations and mains supply wiring requirements, please refer to installation manual.

STEP 7.

Inlet Connection and Final Backfill

Steps & Tips:

- Inlet should not interfere with pump removal or level control operation.
- Proper backfill should be done to prevent damage from excessive settling.
- Backfill material should be free of large rocks and rubbish.
- Slope finish grade away from pump chamber

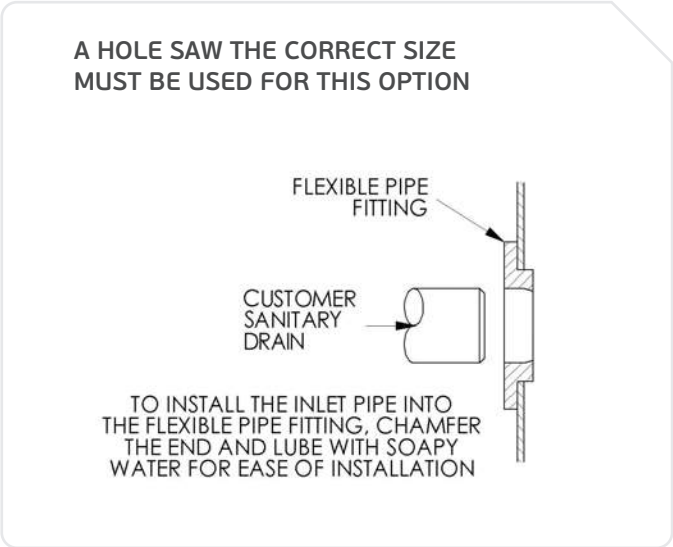

Figure 13. Uniseal Option

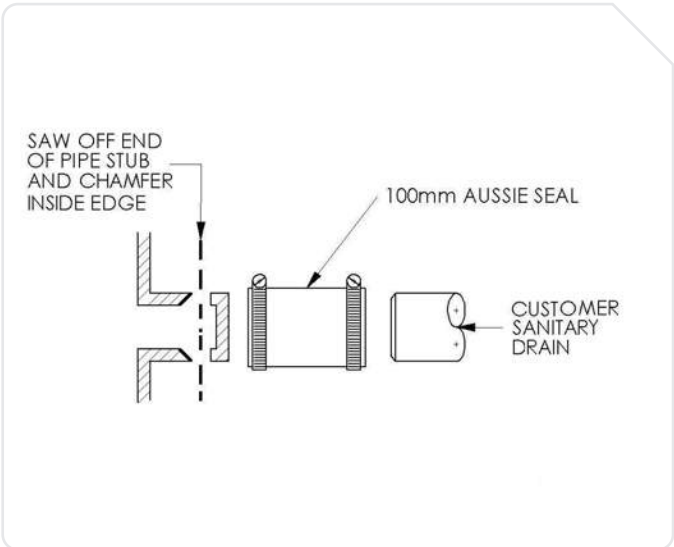

Figure 14. Aussie Seal Option

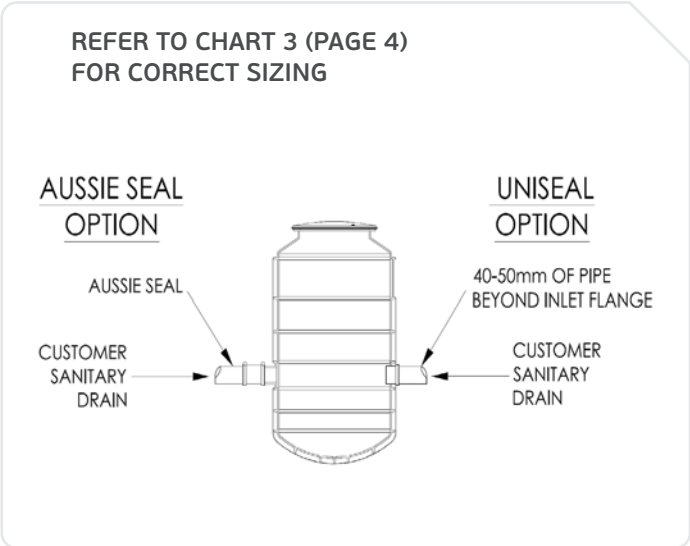

Figure 15: Inlet Installation

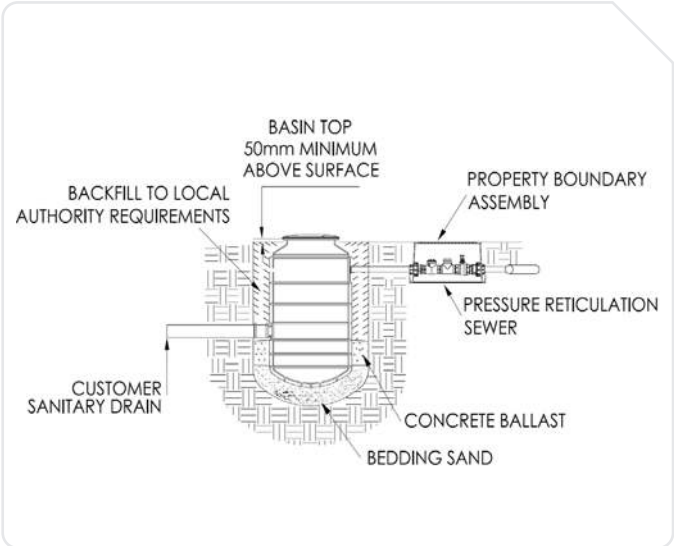

Figure 16: Final Backfill

STEP 8.

Power to Control Panel

Steps & Tips:

- Electrical power should be disconnected and locked out during this part of the installation procedure.
- Check for nicks or defects in the cable and wires before installing.
- Check that connections are secure by pulling on the wires.
- A GFI type breaker should not be used.
- A separate ground and neutral wire are required for proper operation.
- A rated Motor starting circuit breaker is required.

Pump Model	Circuit Requirements
	Service drop/household Circuit breaker panel
OGT	Control panel to be installed on a dedicated 240v single phase circuit with a Single Pole 32 Amp D curve circuit breaker
OGP	Control panel to be installed on a dedicated 240v single phase circuit with a Single Pole 40 Amp D curve circuit breaker

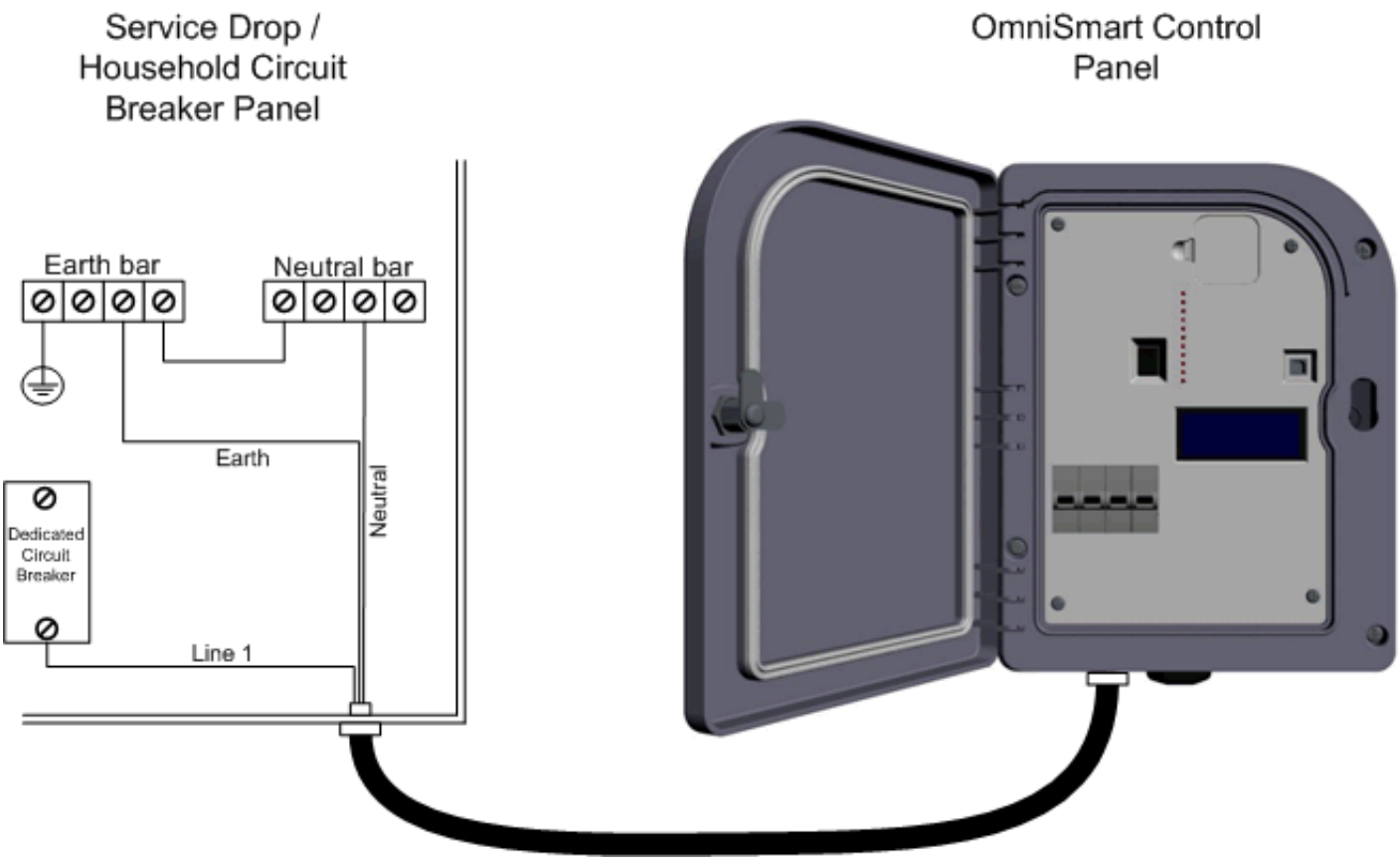

Optional Backup Battery Power to Control Panel

Steps & Tips

- Only used Aquatec supplied re-chargeable Lithium battery
- Incorrect battery could results in an explosion or fire
- Expired Lithium-Ion batteries should be disposed of in accordance with the appropriate regulations or legislation.
- Do not dispose of batteries in a charged condition (however if a pack or cell is physically damaged, it is NOT recommended to discharge battery before disposal)

CAUTION

RISK OF FIRE/EXPLOSION IF BATTERY IS REPLACED BY AN INCORRECT TYPE.

DO NOT CUT, DISASSEMBLE, CRUSH, PENETRATE INCINERATE, OVERHEAT OR EXPOSE CONTENTS TO WATER.

DISPOSE OF USED BATTERIES ACCORDING TO THE INSTRUCTIONS.

STEP 9.

Attach Rope to Pump, Record Pump Data

Steps & Tips:

- Remove parts from box inside unit.
  It should contain the following items: lifting device (rope), Inlet fitting, flexible coupling and uniseal options.
- Record pump information on user guide for future reference.
- NEVER LOWER OR RAISE THE PUMP BY THE ELECTRICAL CABLE
- To attach lifting device to pump:
  1. Make a small overhand loop in the rope.
  2. Bring the short end through the overhand loop.
  3. Place short end behind the fixed part of the rope.
  4. Bring end around and back into the loop.
  5. Pull on the fixed end of the rope away from the loop to tighten the knot.

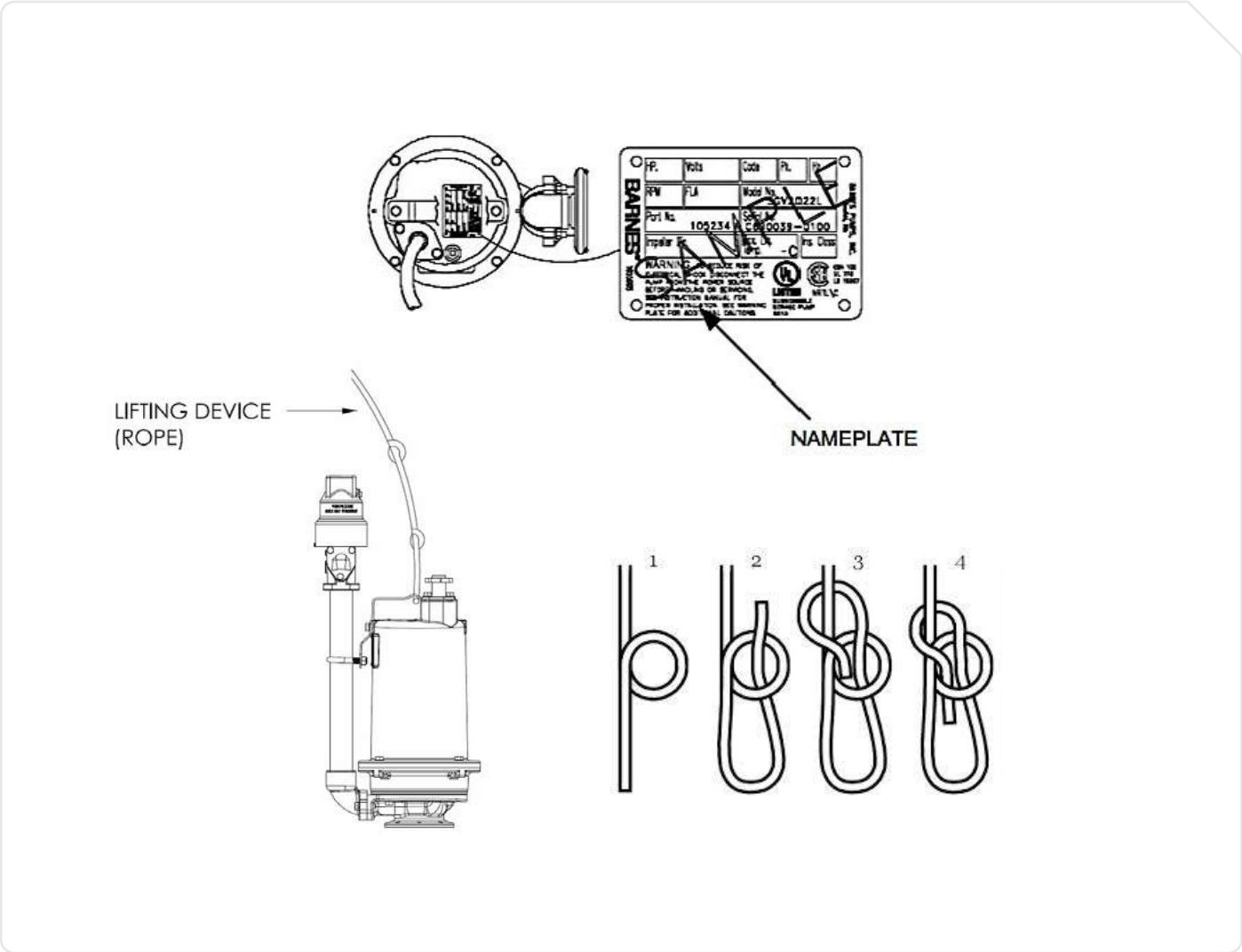

Figure 9: Attaching Lifting Device

STEP 10.

Sliding Pump Into Pump Chamber – Guide Rail or Free Standing System Simplex

Steps & Tips:

- Once the lifting device is attached to the pump, secure it so it will not fall into pump chamber.
- Secure pump cords so they will not fall into pump chamber.
- Follow all Occupational Health & Safety guidelines.
- Align the lower and upper guide brackets into the rail and lower the pump into pump chamber using the lifting device.
- NEVER LOWER OR RAISE PUMP BY THE ELECTRICAL CABLE

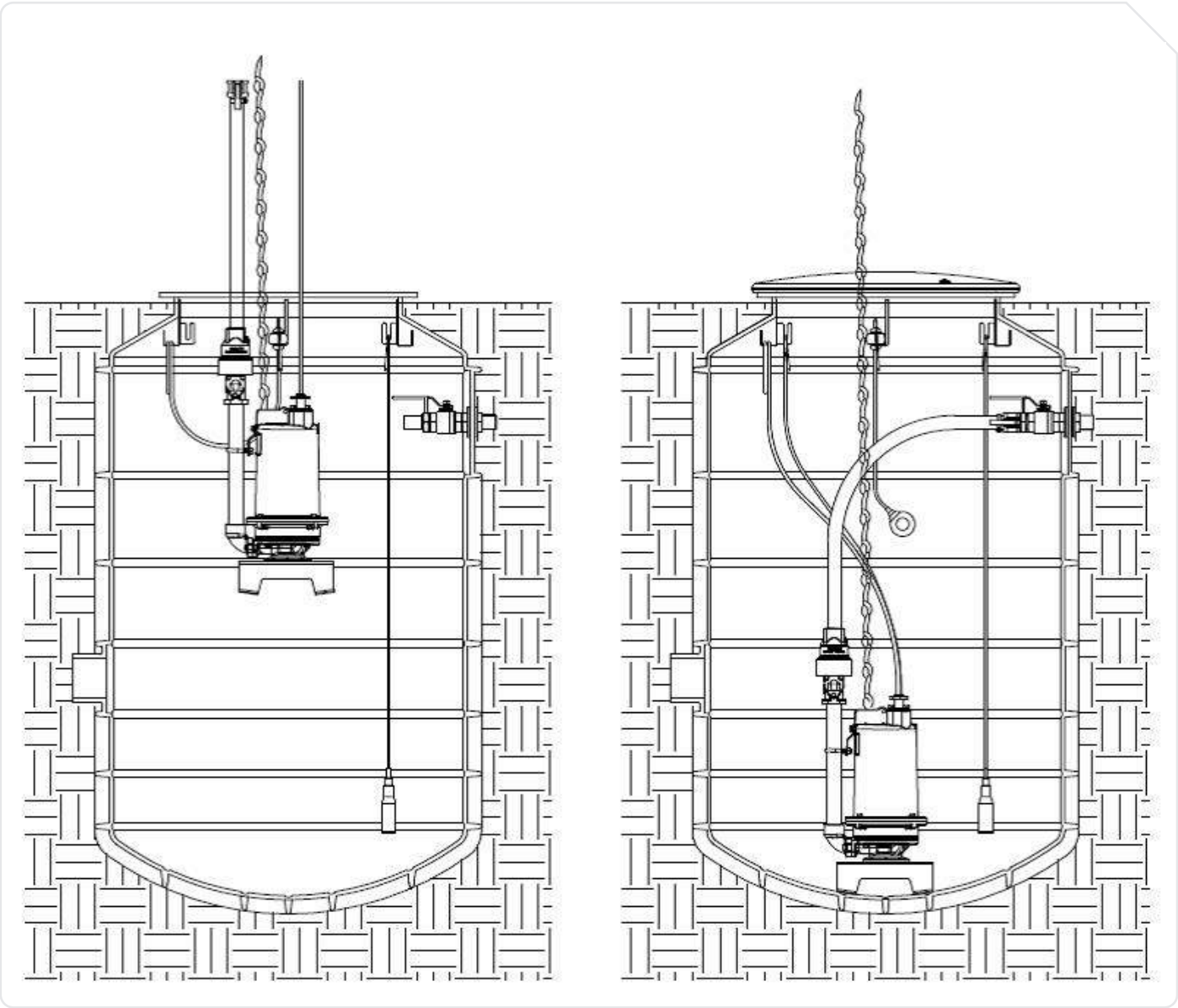

Figure 10: Sliding Pump into Pump Chamber

STEP 11.

Start Up Pre-Checklist

Before starting your unit, check the following items:

INSTALLATION QUESTIONS:

- ☐ Was a proper bedding material used?
- ☐ Is chamber installed level?
- ☐ Was the proper amount and type of ballast used?
- ☐ Was proper backfill and compaction done to support piping?
- ☐ Does the inlet location provide clear removal of the pump?
- ☐ Are all penetrations through the pump chamber wall sealed water-tight?
- ☐ Are all piping connections tight and required valves installed properly?
- ☐ Has minimum of 500mm of water been put into the tank?
- ☐ Has the vent been installed (if required)
- ☐ Verify all valves are open

ELECTRICAL QUESTIONS:

Before checking the following electrical questions, ensure that the electrical installation has been carried out by a qualified electrician to the necessary electrical codes.

- ☐ Are all of the cable glands tight?
- ☐ Are all wiring connections secured?
- ☐ Are all cables secured and clear of the pump?
- ☐ Is the control panel securely mounted?
- ☐ Is the control panel dry?
- ☐ Are cable penetrations entering the control panel correctly?
- ☐ Turn the circuit breaker in control panel to “OFF” position
- ☐ Turn the circuit breaker in the household breaker panel to the “ON” position

Troubleshooting Pump

Caution

- Always disconnect the pump from the electrical power source before handling.
- If the system fails to operate properly, carefully read instruction and perform maintenance recommendations.
- If operating problems persist, the following chart may be of assistance in identifying and correcting them.

Match cause number with correlating correction number.

Note: Not all problems and correction will apply to each pump model.

Problem	Cause	Correlation
Pump will not run	**1.** Poor electrical connection, blown fuse, tripped breaker or other interruption of power, improper power supply. **2.** Motor or switch inoperative (to isolate cause; go to manual operation of pump). **2a.** Float movement restricted. **2b.** Switch will not activate pump or is defective. **3a.** Insufficient liquid level. **3b.** Switch is unable to activate.	**1.** Check all electrical connection for security. Have electrician measure current in motor leads, if current is within ±20% of locked rotor amps. Impeller is probably locked. If current is 0, overload may be tripped. Remove power, allow pump to cool, and then recheck current. **2a.** Reposition pump or clean basin as required to provide adequate clearance for float. **2b.** Disconnect level control. Set ohmmeter for a low range, such as 100 ohms full scale and connect to level control leads. Actuate level control manually and check to see that ohmeter shows zero ohms for closed switch and full scale for open switch. (Float Switch). **3a.** Make sure liquid level is at least equal to suggested turn on point. **3b.** Rotate ESPS level control in horizontal position. **4.** Recheck all sizing calculations to determine proper pump size. **5.** Check discharge line for restrictions including ice if line passes through or into cold areas. **6.** Remove and examine check valve for proper installation and freedom of operation. **7.** Open valve. **8.** Check cutter for freedom of operation security and condition. Clean cutter and inlet of any obstruction **9.** Loosen union slightly to allow trapped air to escape. Verify that turn-off level of switch is set so that the suction is always flooded. Clean vent hole. **10.** Remove and examine for damage. replace pump stator **11.** Repair fixtures as required to eliminate leakage. **12.** Check pump temperature limits and fluid temperature. **13.** Replace portion of discharge pipe with flexible connector. **14.** Turn to automatic position. **15.** Check for leaks around basin inlet and outlets.
Pump will not turn off	**2a.** Float movement restricted. **2b.** Switch will not activate pump or is defective. **4.** Excessive inflow or pump not properly sized for application. **9.** Pump may be air locked. **14.** M-O-A switch on panel is in "MANUAL" position.	
Pump hums but does not run	**1.** Incorrect voltage. **8.** Cutter jammed or loose on shaft, worn or damaged, inlet plugged.	
Pump delivers insufficient capacity	**1.** Incorrect voltage. **4.** Excessive inflow or pump not properly sized. **5.** Discharge restricted. **6.** Check valve stuck closed or installed backwards. **7.** Shut-off valve closed. **8.** Cutter jammed or loose on shaft, worn or damaged, inlet plugged. **9.** Pump may be air locked. **10.** Pump stator damaged/torn.	
Pump cycles to frequently or runs periodically when fixtures are not in use.	**6.** Check valve stuck closed or installed backwards. **11.** Fixtures are leaking. **15.** Ground water entering basin.	
Pump shuts off and turns on independent ofswitch, (trips thermal overload protector). **Caution!** Pump may start unexpectedly. Disconnect power supply.	**1.** Incorrect voltage. **4.** Excessive inflow or pump not properly sized. **8.** Cutter jammed, loose on shaft, worn or damaged, inlet plugged. **12.** Excessive water temperature.	
Pump operates noisily or vibrates excessively.	**4.** Operating at too high a pressure. **5.** Discharge restricted. **8.** Cutter broken. **13.** Piping attachments to building structure too rigid or too loose.	

Troubleshooting Controller

Strobe Flash Sequence

No. of flashes	Fault Description	Resolution
1	Power Failure	Firstly, minimise waste water creation while this alarm is active. If power on within the house, please check circuit breaker within power meter cabinet and controller. If both of these are correct, then electrical cabling may not have been installed correctly.
2	High Level Alarm	This could be caused by a sudden discharge such as from a swimming pool. Check pump running and minimise waste water creation until pump catches back up. Once pump has fluid level below high level, Alarm will self-clear. If still unclear after an hour, contact customer service. Their details are on the side of the control panel.
3	Motor Max Run Time Exceeded or Max Starts Exceeded	These setting are there to protect the pump from excessive use and shouldn't appear during normal operation. It can occur during empting a large pool. Minimise waste water product for the next hour. Alarm can be reset by hold the mute button in for 15 seconds.
4	Over Pressure Protection	Optional pressure sensor connected via BI4, which is normally closed unless the pressure within the system goes beyond the pre-set amount and it opens and triggers this alarm. If pressure sensor not installed then BI4 must be jumpered to stop this alarm from occurring. The SPC will retry to pump (self-clear) once the pressure within the system reduces and the sensor closes.
5	Motor Over Current	Motor drawing more power than what is selected via dip switch SW3. Confirm SW3 has been set correctly for the pump and expected pressure within the system. If SW3 correctly set, then pump is either seeing high system pressure or is jammed.
6	Motor Under Current	Motor not drawing any current. This could be caused by: Circuit breaker switch tripping within the controller; Pump thermal overload; or that the pump has not been connected correctly.
7	Battery Fault	The SPC is configure to expect a Battery via dip switch SW2-4. If battery hasn't been installed and you are getting this error then switch SW2-4 to off (down). If there is a battery then it may either be not plugged in correctly or be faulty. The battery can sometimes take a minute or so to be detected and seen to be charging, so even if the battery has been plugged in correct it might take a little while to self-clear. If you can see the battery is connect correctly, and is indicating a voltage on the LCD, you can reset this error by holding the mute button in for 15 seconds.
8	Probe Fault	This error occurs if the probe's output goes outside the defined range or is measuring less than 10mm of fluid in the tank. Check the probe for built up or that it is functioning correctly, otherwise confirm that the probe is in the fluid.

LED's - The LED's visually indicate the status of the SPC

LED Colour	Label Name	Description
🔴	General Fault	Flashes when a fault occurs/alarm is raised. This LED's flash sequence matches "Strobe Flash Sequence".
🟢	Mains power Voltage OK	On if the AC is within range. Off means the AC is out of range.
🟠	Mains power voltage fault	Off if the AC is within range. 1 flash for low, double flash for high.
🟢	Pump 1 On	On = motor running; flashing = override switch (manual mode); Off = Pump Off
🟢	Pump 2 On	On = motor running; flashing = override switch (manual mode); Off = Pump Off
🔴	High-level Alarm	High-level alarm is triggered.
	Over Pressure	On when the over pressure input is triggered.
🟢 🟢	Level Status	Indicates Probe level: - Off if fluid level under ProbeStop or if ELC-Trans mode not selected. - On if fluid level between ProbeStop and ProbeStart. - Flashing if fluid level above ProbeStart.
🟢	Battery Backup Status	Indicates battery status. On = battery Ok; Flashing = battery charging; Off = No battery.
🟢	MODBUS data activity	MODBUS activity. On when traffic is being sent on MODBUS.
🟢	Mobile Device Status	On = Enabled and registered with carrier; Flashing = Enabled but no registration; Off = Disabled/Not Installed
	Mobile Signal Status	On = 4 or 5 signal bar; Flashing = 3 or less signal bar; Off = No Signal;

Troubleshooting Controller

Dual LCD Screens

Main Screen

```
ELC-T 20 AC:241 3G:4
Sel: Rot 1>2
2017-02-27 15:37:54
Bat:8.1,Chg Fast,27°
```

Line number:

1. Mode, Mains voltage, cellular signal strength (if installed)
2. Pump selection strategy, and ordering of pumps under that strategy.
    a. Pump Selection:
        i. Rot - Rotational
        ii. Run - Runtime
        iii. Str - Starts
        iv. Pri - Priority
        v. idl - Idle
    b. Ordering of pumps:
        i. List of pumps in Auto and available for selection
        ii. As a pump finished running, it moves in the list based on select strategy.
        iii. Pumps on the left of the greater than sign “>” are running. Pumps on the right hand side of “>” are available should they be required. Ordered based on selection strategy.
            1. Left most pump next to be chosen. Right most pump last pump to be chosen.
        iv. Examples:
            1. Rot 1>2: Rotational; Pump 1 currently running. Pump 2 available if required
            2. Rot >2,1: Rotational; No pump currently running. Pump 2 next to be chosen, followed by pump 1
            3. Rot 1,2>: Rotational Both pumps 1 & 2 are currently running.
3. Date and time
4. Battery (if installed)
    a. Battery voltage, status, temperature

Pump Screen (one per enabled pump)

```
Pmp1 Auto-On  M00:13
1Ø10.2A
St:00026 Run:0042:37
In1:Off/0; In2:Off/0
```

Line number:

1. Pump ID; Pump Mode - state; State timer
    a. Pump ID, corresponding to pump number
    b. Pump Mode
        i. Auto-On – In auto mode, and pump currently on
        ii. Auto-Off – In auto mode, and pump currently off
        iii. Dis – Pump disable. Selector switch in off position
        iv. Man – Pump running in manual

c. State timer, display the time that the pump has been in the current state:
   i. Prefix:
      1. M – Motor On time
      2. O – Motor Off time
      3. D – Delay time remaining (counts down)
   ii. Time:
      1. HHHH:MM - Colon (:) = Hours : Minutes
      2. HHHH.MM – Decimal (.) = Hours to two decimal places
2. Current/amps draw of pump
3. Start and run count :
   b. ST:00000 RUN:HHHH:MM - Colon (:) = Hours : Minutes
   c. ST:00000 RUN:HHHH.MM – Decimal (.) = Hours to two decimal places
4. Pump Alarm input 1 & 2 values
   a. "On" or "Off" based on its normally value, and
   b. 1 or 0 based on raw valve

ELC-T Mode Screen

```
AI:14.1mA Lvl:1200mm
S:0140;1:0455;2:0555

HL:0707; BU HL:Off/0
```

Line number:

1. Raw AI value (units change based on selected transducer type). Scaled fluid level based on span
   a. Same as on Line 4 and Line 3 respectively of the non AMD screen
2. Stop, Start 1 and start 2 set points
   a. Corresponds to the values of commands ProbeStop, ProbeStart, and ProbeStart2 respectively.
3. Left blank
   a. Reserved for additional motors
4. High level set point, and backup high level float
   a. Corresponds to the value of command ProbeHigh and SPC-BI-3 value respectively.

ELC-D Mode Screen

```
            St1:Off/0
St2:Off/0

HL:Off/0
```

Line number:

1. Differential Start/Stop float value
2. Value of Start Float 2
3. Left blank
   a. Reserved for additional motors
4. Valve of high level float

ELC-I Mode Screen

```
Stp:Off/1  St1:Off/0
St2:Off/0

HL:Off/0
```

Line number:

1. Individual Start and Stop float values.
   a. Note: Stop float is On when zero/open and Off when 1/closed.
2. Value of Start Float 2
3. Left blank
   a. Reserved for additional motors
4. Valve of high level float from SPC-BI-3

Fault Screen

If there are any faults this screen is added to the rotation. It displays a fault per line, and if there is more than 4 faults then additional fault screen are added. Faults should be ordered based on how they occurred.

```
Pump 1: Over Temp
```

Optional

Installation of Trafficable Cover

Figure 21: Trafficable Cover Option

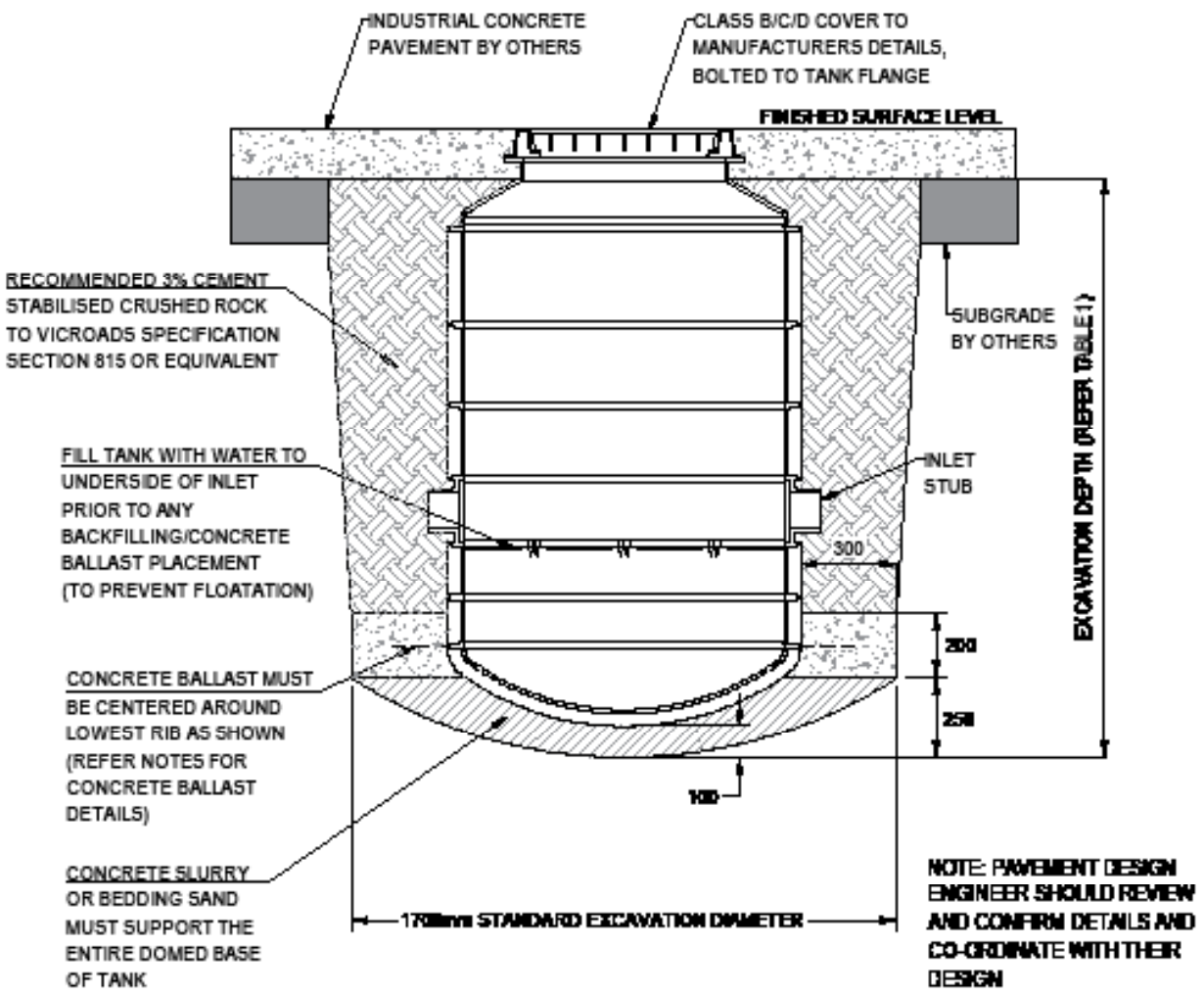

Free Standing Simplex

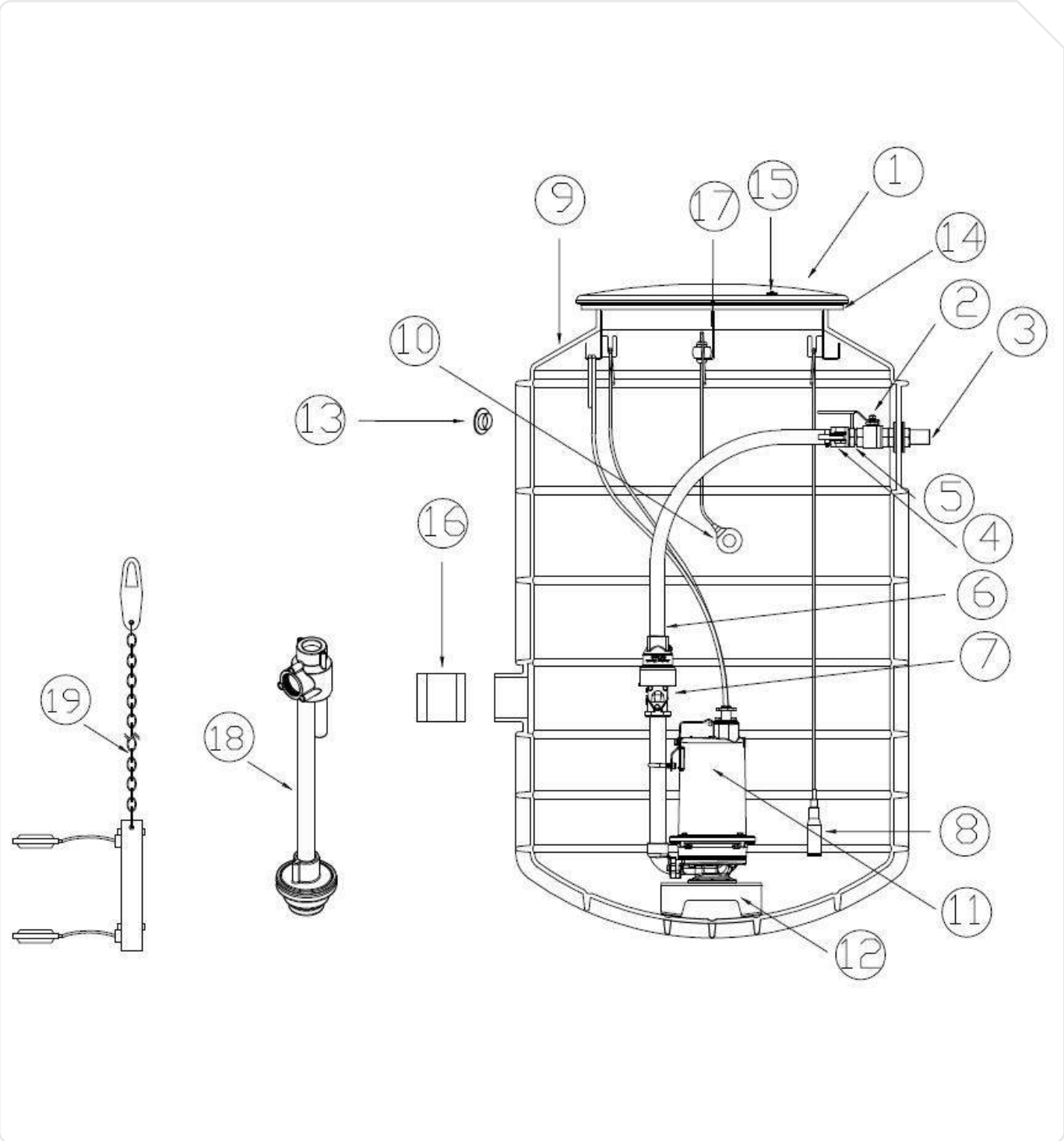

Parts List

Item no.	Part no.	Description
1	LPLP	Low Profile Polyethylene Lid
2	BVSS32	316 Stainless Steel BSP Ball Valve
3	TOS32	316 Stainless Steel BSP Male Threaded Tank Outlet
4	CSTA32	316 Stainless Steel Female Camlock Connector
5	CSTF32	316 Stainless Steel Male Camlock Connector
6	HRD1100-32	Flexible Discharge Pipework
7	124368	Non Return / Anti Siphon Valve
8	LTAQ38-15	Pressure Transducer Level Control
9	TP1100RL-1S	Polyethylene Tank
10	FTP215	High Level Float Switch
11	136653	OGT Pump
12	PPS32	Pump Pedestal
13	UNR20-32	Uniseal
14	PLORR	Cover 'O' Ring
15	22410 49497	Socket Screw Security Screw
16	CR150AC	Flexible Coupling (for site installation)
17	TBBRH	Cable Hook
18	ESPS100 ESPS150	ESPS Free Standing Option
19	AFSA2-15	External Float Switch Level Control

Warranty Registration

Client

Date

Model

Aquatec warrants that the above products of our manufacture will be free of defects in material and workmanship under normal use and service for one (1) year from date of supply.

This warranty shall not apply when damage is caused by (a) improper installation (b) improper voltage (c) lighting (d) excessive sand or other abrasive material (e) scale or corrosion build up due to excessive chemical content. Any modification of the original equipment will also void the warranty, which includes if the seal on the SPC controller is tampered with in any way. We will not be responsible for loss, damage or labour cost due to interruption of service caused by defective parts. Neither will we accept charges incurred by others without prior written approval.

This warranty is void if our inspection reveals the product was used in a manner inconsistent with normal industry practise and/or our specific recommendations. The purchaser is responsible for communication of all necessary information regarding the application and use of the product. Under no circumstances will we be responsible for any other direct or consequential damages, including but not limited to lost profits, lost income, labour charges, delays in production, which damages are caused by any defects in material and/or workmanship and/or damage or delays in shipment. This warranty is expressly in lieu of any other express or implied warranty, including any warranty of merchantability or fitness for a particular purpose.

No rights extended under this warranty shall be assigned to any other person, whether by operation of law or otherwise, without prior written approval.

On behalf of: Aquatec Fluid Systems Pty Ltd

Notes

Notes

Notes

aquatec

aquatecenviro.com

—

2 Provincial Crescent
Shepparton VIC 3630 Australia

PO Box 841
Shepparton VIC 3632 Australia

E admin@aquatecenviro.com

Aquatec Fluid Systems / ABN 94 114 944 026

APPENDIX 4

Parsons Brinkerhoff Geotechnical Report

Norfolk Island

Report on Geotechnical Soils Investigation

June 2005

Norfolk Island Administration

Parsons Brinckerhoff Australia Pty Limited ACN 078 004 798 and
Parsons Brinckerhoff International (Australia) Pty Limited ACN 006 475 056
trading as Parsons Brinckerhoff ABN 84 797 323 433

PPK House
9 Blaxland Road
Rhodes NSW 2138
Locked Bag 248
Rhodes NSW 2138
Australia
Telephone +61 2 9743 0333
Facsimile +61 2 9736 1568
Email sydney@pb.com.au

ABN 84 797 323 433
NCSI Certified Quality System ISO 9001

2110268A
PR_5186

Parsons Brinckerhoff supports the Environment by printing on 100% A4 recycled paper

©Parsons Brinckerhoff Australia Pty Limited and Parsons Brinckerhoff International (Australia) Pty Limited trading as Parsons Brinckerhoff ("PB"). **[2005]**

Copyright in the drawings, information and data recorded in this document ("the information") is the property of PB. This document and the information are solely for the use of the authorised recipient and this document may not be used, copied or reproduced in whole or part for any purpose other than that for which it was supplied by PB. PB makes no representation, undertakes no duty and accepts no responsibility to any third party who may use or rely upon this document or the information.

Author: Doug Graham .....

Reviewer: Rob Kingsland .....

Approved by: Doug Graham .....

Signed: .....

Date: .....

Distribution: 3 Hard copy and 1 CD (including DPF copy and GIS layer) NIA, 1 copy PB file, 1 copy PB library

Contents

Page Number

1. Introduction **1**

2. Desktop Study and Review of Existing Information **2**

2.1 Location and Setting 2

2.2 Topography 2

2.3 Climate 2

2.4 Geology 3

2.5 Soils 4

3. Investigation Methodology **5**

3.1 Desk Study 5

3.2 Field Investigation 5

3.3 Laboratory Testing 6

4. Results of the Investigation **7**

4.1 Geology 7

4.2 Field Mapping and Borehole Drilling 7

4.3 Laboratory Testing 8

5. Comments and Recommendations **10**

5.1 Purpose of Site Classification 10

5.2 Basis of Site Classification 10

5.3 Relationship between the Mapped Soils and Geotechnical Properties 11

5.4 Assessment of Site Classification 11

5.5 Site Classification in Relation to Topography 13

5.6 Site Preparation 14

5.7 Footing Design and Construction 14

5.8 Drainage Maintenance 15

5.9 General Comments Relating to Development Adjacent to Cliff Lines and on Slopes 15

6. Limitations **17**

7. References **18**

Contents (continued)

Page Number

List of Tables

Table 2.1:	Summary of Norfolk Island Soils	4
Table 4.1:	Summary of Atterberg Limits, Moisture Content and Linear Shrinkage Test Results	8
Table 4.2:	Summary of Shrink-Swell Index Tests Results	9
Table 5.1:	Site Classifications	12
Table A1:	Summary of Conditions Encountered During Mapping	5

List of Figures

Figure 1:	Norfolk Island Location Map (Able and Falkland, 1991)	2
Figure 2:	Map of Norfolk Island	3
Figure 3:	Borehole and Mapping Site Location Plan	4
Figure 4:	Plasticity Chart	1
Figure 5:	Site Classifiacation of the Norfolk Island Soils	1

Appendices

Appendix A	Summary of Mapping Results
Appendix B	Engineering Borehole Logs and Explanatory Notes
Appendix C	Laboratory Test Results
Appendix D	Good Hill Side Practice
Appendix E	General Design Precautions for Construction on Reactive Clay Soils
Appendix F	Limitations of Geotechnical Site Investigations

1. Introduction

This report presents the results of a geotechnical soils investigation carried out by Parsons Brinckerhoff (PB) for the Norfolk Island Administration (NIA). The investigation was commissioned by Nicole Diatloff on behalf of NIA on 26 October 2004.

The purpose of the investigation was to provide advice with respect to several aspects of Geotechnical Site Classification in accordance with AS 2870 – 1996 on the island, including:

- What areas of the island, if any, are likely to be classified as Class H, E or P sites (as defined by AS 2870):
- The relationship between these sites and the topography; and
- The relationship between these site classifications and the structures that may be constructed upon these soils.

We have also provided some broad comments with regard to development adjacent to coastal cliff areas and land instability.

We note that the Australian Standard AS2870 – 1996 "Residential slabs and footings – Construction" is applicable to the design and construction of footings for single dwelling houses and townhouses and other forms of construction (e.g. light industrial, commercial and institutional buildings) if they are similar to houses in size, loading and superstructure flexibility.

As part of the study we have produced a new layer for the NIA GIS system that generally applies a broad soil Site Classification Zoning in accordance with AS2870-1996 – Residential Slabs and Footings. Based on this map layer, it is possible for the NIA to assess the likely Site Classification for any area within the island.

2. Desktop Study and Review of Existing Information

2.1 Location and Setting

Norfolk Island is located approximately 1600 km ENE of Sydney in the South Pacific Ocean at latitude 29° 3' 45" South and longitude 167° 56' 29" East, as shown in *Figure 1* (Abell and Falkland, 1991). The island is approximately square, less a truncated north eastern corner, and is about 8km long (measured northeast-southwest) and 7km wide in maximum dimension, and has an area of about 3450Ha, as shown in *Figure 2*.

2.2 Topography

Norfolk Island is an extinct remnant of a volcanic cone which has been considerably modified by weathering and stream dissection. The dominant features of the Island are the dual peaks of Mt Pitt and Mt Bates which are located in the interior of the north west. These peaks rise to about 318m and 313m respectively. From these peaks, the ground surface generally falls moderately to steeply down to a plateaux that rings the peaks, which has an elevation typically of about 120m. The plateau is widest to the south of the peaks (about 2km to 4km wide), almost pinches out to the west and northeast, and is about 1km wide to the northwest. The plateau is heavily dissected by creek lines that generally run radially from the dual peaks. This dissection, along with uplift and coastal erosion has resulted in Norfolk Island having a coastline which consists mainly of cliffs, which vary between 30m and 80m in height. Nearly all the creek lines of Norfolk Island enter the sea by rapids and falls over the cliffs. Occasional swamp conditions can be found along stream paths at the flatter grades. A coastal low land is located on the southern side of the island at the township of Kingston. This lowland is about 1.5km long and 0.5km wide, with a typical elevation of about 20m,

2.3 Climate

The climate of Norfolk Island is typically sub-tropical, with mild temperatures and a well distributed rainfall pattern precipitating about 1300mm of rainfall annually. The meteorological station located at the Islands' airport collects rainfall and temperature data. A summary of the climatic conditions from Abel and Falkland 1991 is provided below.

Based on climatological readings taken up to 1987, the mean annual rainfall was 1326mm, with maximum rainfall occurring in winter (June and July) and the minimum occurring in summer (November and January). The average number of rain days per month varied between 23 in June to 12 in November. The humidity through out the year is fairly constant, with monthly averages varying between 77% and 82% (Stephens and

Hutton, 1954), and a yearly average of 79%. Winds typically blow from the east in the summer and west in the winter, with average velocities of between 11km/hr or 20km/hr.

2.4 Geology

Norfolk Island lies on the eastern edge of the Australian lithospheric plate, and is located on the pronounced Norfolk Rise, a north south trending continental ridge between New Zealand and New Caledonia. The island is an erosional remnant of a number of volcanic centres that were constructed during several volcanic episodes from about 3 million years ago to about 2.3 million years ago.

Norfolk Island is almost completely volcanic in origin, with the rocks dominantly comprising fine to medium grained olivine basaltic lavas and pyroclastic tuff (layered volcanic ash). The basalts constitute a wide variety of volcanic lithofacies related to variations in the physical condition of lava at the time of eruption, its mode of eruption, and environments of eruption and emplacement (Jones and McDougal, 1973). Within the island there are five main geological formations, four of which comprise distinct volcanic layers, as follows:

- The Ball Bay Basalts (formed approximately three million years ago);
- The Duncombe Bay Basalts (formed approximately 2.6-2.7 million years ago);
- The Cascade Basalts (formed approximately 2.4 million years ago); and
- The Steele's Point Basalts (formed approximately 2.3-2.4 million years ago).

Basaltic sheet lavas are the most common rock type. The flows are generally flat lying are up to 30m in thickness, and often display well developed columnar jointing and occasional flow banding. The basalts typically weather to form spheroidal basaltic core stones, often in a matrix of completely weathered basalt or high plasticity residual clay.

The pyroclastic tuff rocks are typically interbedded with and lie unconformably on the basalts. They range in thickness from a few metres up to 15m. The tuff typically weathers to form well structured high plasticity residual clay soils.

The basaltic lavas and tuffs are often highly weathered to great depths, commonly as much as 45m.

Each lava flow and tuff layer represents a new period of volcanic activity that has occurred after a period quiescence, during which time weathering and erosion has occurred. As a result, subsequent volcanic events are often laid down over a weathered surface consisting of weathered rock or residual soils (see Plate 1).

The fifth main geological formation within the island consists of a coarse marine calcareous rock, calcaranite, (sand, coral and shell fragments cemented with lime) of late Pleistocene origin and is located near Kingston. The rock was in part deposited by on-shore winds during a period of low sea level, and subsequently lithified and cemented with lime. The soils formed on this material are dominantly sandy in nature.

2.5 Soils

The soils that have developed on the island have a strong relationship with geology and topography. Based on the Soil Map of Norfolk Island and the associated paper by Stephens and Hutton, 1954, it appears that the majority of the island soils are clayey soils that have developed over the basalt flows. The thickness of these soils appears to be dependent on the slopes upon which they have developed – generally speaking, the steeper the slope the thinner the soil profile. In the southern part of the island, a pocket of sandy soils exist near the township of Kingston, which have developed over a small pocket of Calcaranite. We note that the 1954 study classified the island's soils in terms of great soil groups, which is more suited to agricultural studies, rather than engineering studies.

A summary of the mapped soils from the Stephens and Hutton study is reproduced in *Table 2.1* below:

Table 2.1: Summary of Norfolk Island Soils

Soil Series	Topography and Drainage	Parent Material	Soil Grading		
			Clay	Silt	Sand
Palm Glen Clay	Steep to moderate slopes – unrestricted drainage	Basalt	77	15	2
Mt Pitt Clay	Moderate slopes – unrestricted drainage	Basalt	82	11	2
Rooty Hill Clay	Steep to moderate convex slopes and ridge tops – unrestricted drainage	Basalt	76	10	10
Steel's Point Clay	Gently undulating to flat – unrestricted drainage	Probably Tuff	77	12	9
Middlegate Gravelly Clay	Gently undulating drainage divide – unrestricted drainage	Basalt	85	5	3
Selwyn Clay	Gently undulating areas on cliff tops – unrestricted drainage	Basalt	71	16	7
Emily Bay Calcareous Sand	Undulating – restricted drainage	Calcarenite	-	-	-
Unnamed Shallow Stony Soils	Steep slopes – unrestricted drainage	Basalt	-	-	-
Unnamed Alluvial Soils	Gently sloping to flat – unrestricted drainage	Basaltic Alluvium	-	-	-
Unnamed Swamp Soils	Valley floors with restricted drainage (acid sulfate potential)	Basaltic Alluvium	-	-	-

The results of the Stephens and Hutton study of 1954 indicated that the clayey soils on the island derived from the basalts are typically silty clays with a minor sand fraction.

3. Investigation Methodology

3.1 Desk Study

A desktop study was undertaken that comprised a review of our previous environmental study (reference 2110309A_PR_7657, dated October 2003), the existing Norfolk Island Geographic Information System (GIS), and soils, geological and topographical information made available to and researched by PB.

As a result of the study, contour, slope and soils maps were produced by PB's GIS operators to provide a base onto which the field investigation locations and notes were annotated.

3.2 Field Investigation

The field investigation was conducted between 1 February and 5 February 2005 and comprised field mapping of exposed rock and soil out crop, followed by borehole drilling at selected locations across the island.

3.2.1 Field Mapping

The field mapping was undertaken over a period of two days by an experienced senior engineering geologist, to regionally ground truth the desktop study, and establish a preliminary borehole drilling and sampling plan. A total of 16 sites were visited during the mapping, where records were taken as to the soil composition, and samples collected for office assessment and laboratory testing. The locations of the mapping sites are shown in *Figure 3*.

A summary of the soil and rock conditions encountered during the mapping is presented in *Appendix A*.

3.2.2 Borehole Drilling

Following the mapping, 17 boreholes were drilled over a period of two days using a Bobcat mounted drilling rig. The boreholes were drilled to depths ranging between 1.5m and 2.6m, using a 300mm diameter posthole auger. U50 push tubes were collected using a device attached to the auger that was fabricated on the island. Pocket penetrometer tests were conducted in the ends of the U50 push tubes, while disturbed soil samples were collected from the auger for office assessment and laboratory testing.

The subsurface investigation was observed on a full time basis by a senior engineering geologist, who was responsible for locating the boreholes, logging the subsurface profile, monitoring the drilling and collecting the soil samples. The boreholes were located using a hand held GPS unit, the coordinates of which appear on the borehole logs. The reduced levels shown on the borehole logs were interpolated from spot heights on the contour plans. The locations of the borehole sites are shown in *Figure 3*.

Engineering logs of the boreholes are attached to the rear of this report in *Appendix B* along with a set of Explanatory Notes that define the terms and symbols used in their preparation.

3.3 Laboratory Testing

Selected soil samples from the boreholes and mapping sites were dispatched to a NATA accredited laboratory in Sydney under PB's standard Chain of Custody conditions and an Australian Quarantine Inspection Service (AQIS) permit, for laboratory testing as follows:

- 5 Shrink Swell tests;
- 19 Atterberg Limits tests; and
- 19 linear shrinkage test;

The results of the laboratory tests are presented in *Appendix C* and summarised in *Section 4.3*.

4. Results of the Investigation

4.1 Geology

Based on the results of the desk top study, the majority of the Norfolk Island geology generally comprises a series of Tertiary age Basalts flows, with a minor pocket of coarse marine calcareous rock (Calcaranite) of late Pleistocene origin.

The results of the investigation were essentially consistent with the results of the desk top study.

4.2 Field Mapping and Borehole Drilling

For a detailed description of the subsurface conditions encountered during the mapping and drilling, reference to the attached mapping summary and borehole logs in *Appendices A and B* respectively is recommended.

In general terms the subsurface conditions encountered generally comprised a layer of topsoil, overlying a high plasticity clay residual soil profile of varying depth, beneath which variably weathered basalt was encountered. Sandy and clayey fill materials of varying depth were also encountered at several locations.

The pertinent aspects of the encountered subsurface conditions are summarised below:

Fill Materials

Encountered in boreholes BH1, BH2, BH5, BH6, BH7, BH16 and BH17, comprising clayey sand, silty sand, silty clay and silty gravely clay generally of medium plasticity. The fill ranged in depth between 0.3m to 1.6m and is considered to be uncontrolled fill. As the majority of the boreholes were drilled adjacent to road ways, we have assumed that most of the fill materials are associated with the road construction.

Topsoil

Encountered in all boreholes except BH2, BH5, BH6, BH9, BH16, and BH17 either from the ground surface or beneath fill materials, generally comprising either silty sand or silty clay of low and low to medium plasticity. The thickness of the topsoil generally ranged between 0.4m and 0.6m, with one location (BH10) where the topsoil was up to 1.2m thick.

Residual Soil

Residual soils were encountered in all boreholes and at each of the mapping sites, either beneath fill materials or topsoils. The residual soils generally comprised silty clay, silty gravely clay or clayey silt and were typically of high plasticity, with moisture contents generally estimated to be close to or above the plastic limit.

Weathered Basalt

Weathered basalt was encountered in boreholes BH4, BH6 and BH9, at all mapping sites except Sites 1, 7, 10, 14, 15 and 16, and generally consisted of extremely to highly weathered basalt of very low to low strength. In the road cuttings, the basalt was often vesicular, displayed spheroidal weathering patterns forming core stones up to about 1m in diameter, and occasionally flow banded.

Groundwater inflows were not observed in any of the boreholes or at any of the mapping sites. We note that climatic conditions and precipitation may influence groundwater levels.

4.3 Laboratory Testing

Nineteen samples of the residual clay collected from both the boreholes and mapping sites were subject to Atterberg Limits, moisture content and linear shrinkage tests conducted at a NATA accredited laboratory located in Sydney. The results of the Atterberg Limits tests are plotted in a plasticity chart in *Figure 4*, summarised in *Table 4.1* below along with the moisture content and linear shrinkage test results, and presented in full in *Appendix C*. The test results in *Table 4.1* below have also been listed against the mapped soil unit from which they were sampled (Stephens and Hutton, 1954).

Table 4.1: Summary of Atterberg Limits, Moisture Content and Linear Shrinkage Test Results

Test Location	Moisture Content (%)	Liquid Limit (%)	Plastic Limit (%)	Plasticity Index (%)	Linear Shrinkage (%)	Mapped Soil Unit (after Stephens et al 1954)
BH2	25.1	54	32	22	13	Steels Point Clay
BH3	32.9	63	28	35	15.5	Steels Point Clay
BH5	28	53	28	25	13.5	Rooty Hill Clay
BH7	40.1	70	40	30	14.5	Rooty Hill Clay
BH8	38	89	40	49	19.5	Mt Pitt Clay
BH10	38	70	33	37	17.5	Selwyn Clay
BH11	40.8	84	36	48	19.5	Selwyn Clay
BH13	31.4	57	30	27	16.5	Rooty Hill Clay
BH14	31.5	44	29	15	9.5	Middlegate Gravelly Clay
BH15	33.9	61	34	27	15	Rooty Hill Clay
BH16	36.1	56	34	22	11.5	Steels Point Clay
BH17	37	69	34	35	16	Rooty Hill Clay
Site 2	44.6	72	34	38	17.5	Rooty Hill Clay
Site 5	35.5	68	41	27	15	Rooty Hill Clay
Site 5	50.1	109	46	63	23.5	Rooty Hill Clay
Site 7	51.7	79	50	29	19	Unnamed Stony Soils
Site 11	33.3	60	32	28	15.5	Rooty Hill Clay
Site 14	39.5	84	38	46	20.5	Selwyn Clay
Site 16	53.9	104	44	60	19.5	Palm Glen Clay

As indicated in *Figure 4*, all the results of the Atterberg Limits tests (except one – BH14 from the Middlegate Gravelly Clay unit), indicate that the soils tested are high plasticity silty clays or clayey silts. The sample from BH14 is a medium plasticity silty clay.

Five samples of the residual clay collected from the boreholes were subject to Shrink-Swell Index (I_{SS}) testing to assess the shrinkage index (I_{ps}) of the soils, with the tests conducted at a NATA accredited laboratory located in Sydney. The results of the tests are summarised in *Table 4.2* below and presented in full in *Appendix C*.

Table 4.2: Summary of Shrink-Swell Index Tests Results

Test Location	Shrink-swell Index (I_{SS})	Moisture Content (%)
BH3	2.1	29
BH4	2.2	34
BH11	3.5	40.7
BH12	3.2	37.7
BH15	2.6	31.8

As indicated in *Table 4.2* the shrink-swell index test results are very similar for each of the residual soil samples tested.

5. Comments and Recommendations

5.1 Purpose of Site Classification

Most natural clay soils derived from the weathering of parent rock have sufficient bearing capacity to support typical residential loads. Most distress to residential and light commercial structures commonly occurs due to reactive soil movements due to changes in soil moisture. Site classification is a method adopted in residential and light commercial development for quantifying the anticipated ground movements that may occur on a site principally due to soil reactivity.

AS 2870 – Residential Slabs and Footings – 1996 and Supplement 1 1996, establishes a classification system whereby reactive clay sites are classified based on the reactive clay movements anticipated. Other foundation conditions such as the presence of fill material or the depth to rock, may affect the site classification. The purpose of the classification is to allow the design of an economical footing system, which will limit cracking of footings, floor slabs and masonry walls to an extent normally considered acceptable (the performance expectations are defined in AS2870 Clause 1.3.1), due to reactive movements of the clay foundation.

5.2 Basis of Site Classification

The Australian Standard AS 2870 – Residential Slabs and Footings provides the basis for Site Classification, and three procedures are offered as follows:

1. prior performance;
2. profile Identification; and
3. movement Estimates.

In this study we have adopted a combination of procedures 2 and 3, that is, we have identified the subsurface profile through a site visit involving mapping and borehole drilling, and made estimates of the Characteristic Surface Movement (y_s) based on laboratory soil classification and shrink-swell tests carried out on samples of residual soil collected during the field work.

Procedure 1 was not used as PB has no previous geotechnical experience on the island, nor knowledge of the type and style of footings typically used.

The Characteristic Surface Movement (y_s) is the vertical movement range expected during the life of the house from a reasonable estimate of dry conditions to a similar reasonable estimate of wet conditions and does not take into account the moderating effect of the footing system (AS2870 Supp1 – 1996).

AS 2870 – 1996 defines the various site classifications in terms of y_s as follows:

S	Slightly reactive	$y_s < 20mm$
M	Moderately reactive	$20mm < y_s < 40mm$
H	Highly reactive	$40mm < y_s < 70mm$
E	Extremely reactive	$y_s > 70mm$

Based on the results of the laboratory testing i.e. Atterberg Limits, Linear Shrinkage and Shrink-Swell index tests, estimates of the Characteristic Surface Movement were made and the various areas investigated were classified accordingly.

Appendix D of AS 2870 – 1996 also provides a ready guide to the expected level of site classification in areas where sufficient data have been collected such that relationships between the typical soil profile and site classification have been established. As such, Appendix D of AS 2870 – 1996 can be used to check the calculated classification. Furthermore, the classification of sites for areas other than those provided in Appendix D of the standard may be based on an appropriate Table, provided the climates and soil types and soil profiles are similar between the areas. This comparison technique was also used in assessing the site classification of Norfolk Island.

5.3 Relationship between the Mapped Soils and Geotechnical Properties

The intent of this investigation was to map, sample and analyse typical soils of Norfolk Island in order to apply general site classifications to various parts of the island. As discussed in *Section 2.5*, the soils of the island were mapped in 1954 by Stephens and Hutton from a pedalogical stance in terms of great soil groups. This classification scheme is more suited to agricultural purposes, rather than engineering purposes. With a soil map already in place, the field investigation therefore targeted the various soils mapped in 1954 in an effort to compare how the various units relate to an engineering classification.

As can be seen in *Tables 4.1.* and *4.2*, and *Figure 4*, the vast majority of the soils are high plasticity clays or silts, and also have a very similar Shrink Swell Index value. On this basis, we have concluded that the soils formed on the basalts of Norfolk Island are very similar with respect to their geotechnical properties, and are likely to give rise to similar classifications across the island.

5.4 Assessment of Site Classification

5.4.1 Profile Identification and Movement Estimates

In assessing site classification for the island, we have calculated the Characteristic Surface Movement (y_s) at each of the boreholes sites. This calculation was based on the profile identified during the drilling and the results of the laboratory testing, including the Linear Shrinkage and Shrink-Swell Index tests.

Each of the borehole sites have been classified in accordance with AS2870 "Residential Slabs and Footings", as detailed in *Table 5.1* below.

Table 5.1: Site Classifications

Test Location	Characteristic Surface Movement (y_s)	Site Classification	Mapped Soil Unit (after Stephens et al 1954)
BH1	35mm	**M**	Middlegate Gravelly Clay
BH2	40mm	**M**	Steels Point Clay
BH3	50mm	**H**	Steels Point Clay
BH4	35mm	**M**	Middlegate Gravelly Clay
BH5	40mm	**M**	Rooty Hill Clay
BH6	45mm	**H**	Rooty Hill Clay
BH7	60mm	**H**	Rooty Hill Clay
BH8	70mm	**H**	Mt Pitt Clay
BH9	55mm	**H**	Rooty Hill Clay
BH10	60mm	**H**	Selwyn Clay
BH11	70mm	**H**	Selwyn Clay
BH12	50mm	**H**	Steels Point Clay
BH13	55mm	**H**	Rooty Hill Clay
BH14	20mm	**S**	Middlegate Gravelly Clay
BH15	50mm	**H**	Rooty Hill Clay
BH16	40mm	**H**	Steels Point Clay
BH17	55mm	**H**	Rooty Hill Clay

These classifications generally assume that:

- prior to building any fill materials and organic matter have been stripped, and that any encountered topsoils are treated in accordance with the requirements of Section 6 of AS2870; and

- up to 500mm of reactive clay soils have been placed as engineered fill to level a building site.

In some areas fill materials were encountered to depths of greater than 400mm. If we had not adopted the assumption that the fill materials were stripped, these sites would have been classed as Class P sites. As these fill sites are likely to be isolated, it would not be sensible to apply a P classification in a broad zoning study such as this.

As indicated in table nearly all of the profiles identified during the drilling are classified as **Class H** sites. The exceptions are:

- Boreholes BH1, BH4 and BH14 located in the Middlegate Gravelly Clay unit, which, based on the movement estimate method, is classified as a Class M unit. This unit is likely to be less reactive than the other clayey units due to the gravel content. However given its limited coverage over the island in small pockets and its high range Class M movement in boreholes BH1 and BH4, it would be prudent to classify this unit as **Class H** also.

- Boreholes BH8 and BH11, located in the Mt Pitt Clay and Selwyn Clay units respectively. The calculated Characteristic Surface Movement (y_s) for both these profiles was on the boarder between Class H and Class E. On this basis, and given the consistent classifications calculated elsewhere and its high range Class H movement, we have elected to classify both these profiles as **Class H** also.

- Boreholes BH2 and BH5, located in the Steels Point Clay and Rooty Hill Clay units respectively. The calculated Characteristic Surface Movement (y_s) for both these profiles was on the boarder between Class M and Class H. On this basis, and given the consistent classifications calculated elsewhere and its high range Class M movement, we have elected to classify both these profiles as **Class H** also.

This investigation targeted clayey soils, in an effort to establish their reactivity. For this reason, boreholes were not drilled in the sandy soils located on the southern side of the island in the Kingston region. The area mapped by Stephens and Hutton as "Emily Bay Calcareous Sand", has provisionally been classified as **Class S**, while the area mapped as "Basaltic Colluvium mixed with Calcareous Sand" has provisionally been classified as a **Class M** area.

The results of the site classification assessment are presented on a layer within the Norfolk Island GIS system. This has been reproduced as *Figure 5* in this report.

These site classifications assume that site maintenance complies with *Appendix B* of AS 2870 – 1996.

5.4.2 Comparison with Similar Areas

Appendix D of AS 2870 – 1996 allows for site classification based on typical profiles. In order for this style of assessment to be used, there must be a strong correlation between the site being classified and the tables in the appendix with respect to soil profile and climatological conditions.

After viewing the tables in the Appendix, Table D2 – Victoria provided the closest match with respect to the subsurface profile, and allowed for a range of climatological conditions to be compared.

Using Table D2 we assumed the following:

- climatic Zone 2 – wet temperate, and
- basaltic Clays between 0.6 and 1.8m deep.

On this basis, the typical profile is classified as **Class H**, which is in concurrence with our classifications based on the calculated Characteristic Surface Movement (y_s)

5.5 Site Classification in Relation to Topography

Based on the results of the borehole drilling, the residual soil profile over the majority of the island appears to be greater than 0.6m in thickness. On this basis, we expect the

there is unlikely to be a change in the Site Classification of an area due to steeper ground.

5.6 Site Preparation

Prior to construction of footings, ground slabs or filling, any fill materials and organic matter should be stripped, and any encountered topsoils should be treated in accordance with the requirements of Section 6 of AS2870. Areas to be filled should be proof rolled and any soft or heaving materials removed. Areas exposing bedrock will not require proof rolling.

Evidence of fill was observed in several boreholes, however its extent is considered to be limited over the island. Any fill that is encountered on a site should be considered to be uncontrolled fill, and should be removed from areas to support high-level footings.

Any proposed site regrading should take into account the guidelines provided in *Appendix D Table 3* - "Good Hillside Construction Practice".

5.7 Footing Design and Construction

In general, flexible structures such as brick veneer or clad frames are preferred for residential development on reactive clay sites. Footings should be designed by a practising structural engineer in accordance with AS2870 - 1996 for the classifications provided in *Section 5.4* above and presented in *Figure 5*.

Strip/pad footings, raft slabs and pier and beam systems would be suitable footing types.

Any future cut and fill earthworks may effect the site classifications provided in this report. We recommend that the site classifications be reassessed if excavations in excess of 0.4 m or filling in excess of 0.5 m thick are proposed.

Footings should be excavated, cleaned out and poured with minimum delay. If footing excavations are to be left open for an extended period of time, a concrete blinding layer should be provided to protect the foundation material. Should any uncompacted fill or locally deep topsoil be encountered during footing excavation, these materials should be penetrated and the footings founded in accordance with the requirements of Section 6 of AS2870. A geotechnical engineer should be consulted if these conditions are encountered. We note that deep fill materials and topsoil were encountered in boreholes BH6, BH7 and BH10.

Where footing excavations are partially on rock, the whole footing should be taken to rock to achieve uniform bearing and foundation conditions. Alternatively structures may be articulated over changes in founding conditions, in accordance with AS2870.

Where footings are to be piered to rock, reclassification of the site and amendment to footing sizes may be appropriate, and both a geotechnical and structural engineer should be consulted prior to construction of the footing.

5.8 Drainage Maintenance

Adequate site drainage should be installed to prevent ponding of surface water adjacent to structures. Surface flows should be directed away from structures and into the stormwater disposal system. All roof run off should be collected and piped to the stormwater system.

Subsoil drains from any retaining walls should be connected to the stormwater system. Surface dish drains should be provided at the crest of all cut or fill batters and retaining walls.

Classification of the subject lots has been assessed based on moisture variations caused by normal climatic and garden conditions. More severe moisture variations can be caused by other common, but controllable factors. Reactive soil notes included in Appendix E are intended as a summary to those provided in CSIRO 10 - 91 "A guide to Home Owners on Foundation Maintenance and Footing Performance" and should be regarded as 'recommendations'. Future owners should be advised of these maintenance procedures, as it is commonly accepted that most damage to residential type structures on reactive sites is due to poor site maintenance.

5.9 General Comments Relating to Development Adjacent to Cliff Lines and on Slopes

The majority of Norfolk Island is surrounded by cliffs that range in height from 30m to 80m, and as such, present desirable locations with respect to residential development.

The vast majority of the island is made up of olivine rich basalt, which was laid down in four volcanic episodes over a period of about 700,000 years commencing three million years ago. Each episode was about 150,000 to 200,000 years apart. As such, basalt rock is dominantly exposed in the cliff lines. Areas where the dominant rock type is basalt are renowned for their association with land instability. This instability typically occurs for several reasons, as follows:

1. The layered nature in which basalt is typically laid down often provides for preferential sub-horizontal ground water flow paths. As groundwater accumulates along these flow paths, pore pressures build and contribute to land instability.

2. If basalt flows occur with significant amounts of time between each flow, the ground surface has time to weather and form a soil horizon. This means that for each successive volcanic event, the basalt will flow over a previously developed soil profile. Such geological occurrences are prone to land sliding as a defined layer of weakness exists within the profile. These ancient buried land surfaces also provide a preferential path for groundwater flow and become prone to land instability. During the mapping carried out on the island, ancient land surfaces buried by basalt flows were observed at several locations, as shown in *Plate 1*.

3. The mineral olivine is particularly susceptible to weathering and once weathered, forms various clay minerals. As the basalt rock mass weathers, its shear strength is

gradually reduced. The presence of the weathered olivine further reduces the shear strength, promoting land instability.

While major cliff instability events are unlikely to occur frequently in a human lifetime, they are significant coastal forming processes that are likely to be frequent occurrences in a geological time frame. Therefore, for the reasons outlined above, it is important that a suitable offset be provided between a cliff line and any residential development. Without a detailed study of such land forming events on the island, it is difficult to provide a definitive offset. However, such on offset would likely be set to a minimum distance up to a certain cliff height, and then scaled up as the height of the cliff increases. For the purposes of this section of the report, we would expect that the minimum offset could be 20m for cliffs less than 20m in height, and then equal the height of the cliff for cliffs greater than 20m in height.

With regard to developments on slopes, the guidelines provided in *Appendix D* should be followed. These guidelines are particularly relevant to the slopes on Norfolk Island, where there is likely to be a significant risk of land instability initialled by developments with poor hill side practice, given the steep slopes, basaltic geology, high plasticity residual clay soils, and the relatively high rainfall.

6. Limitations

It is possible that the subsurface conditions encountered during construction may vary from those identified by this report. Should such variations or differences become apparent we recommend that this office should be immediately contacted for further geotechnical advice. This report should be read in conjunction with the appended notes that explain the limitations of the geotechnical investigations (*Appendix F*).

7. References

1. Abell, R.S. and Falkland, A.C., (1991), *The Hydrogeology of Norfolk Island, South Pacific Ocean*, Department of Primary Industries and Energy, Bureau of Mineral Resources, Geology and Geophysics, Bulletin 234.

2. C.G. Stephens and J.T. Hutton, (1954), *A Soil and Landuse Study of the Australian Territory of Norfolk Island, South Pacific Ocean*, Division of Soils, Commonwealth Scientific and Industrial Research Organisation, Australia, Melbourne.

3. J.G. Jones and I. McDougal, (1973), *Geological History of Norfolk and Philip Islands, South West Pacific Ocean*, Journal of the Geological Society of Australia, Volume 20, Pt.3, pp 239 – 257

4. Australian Standard, AS 2870 – 1996: Residential Slabs and Footings (Incorporating Amendments Nos 1, 2, 3 and 4), Standards Australia International, Sydney, Australia

5. Australian Standard, AS 2870 Supplement 1 – 1996: Residential Slabs and Footings – Construction – Commentary, Standards Australia International, Sydney, Australia

Figures

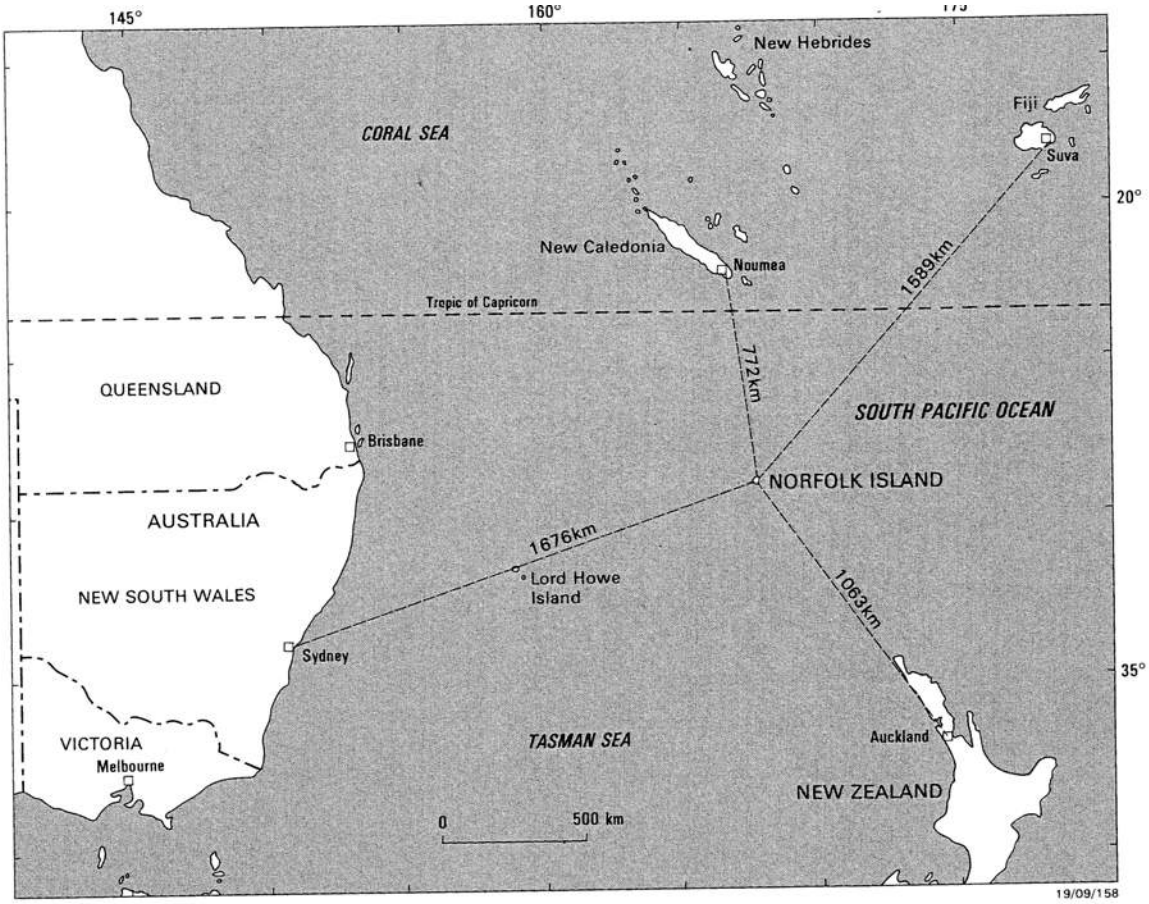

Figure 1: Norfolk Island Location Map (Able and Falkland, 1991)

Figure 2: Map of Norfolk Island

Figure 3: Borehole and Site Mapping Locality Plan

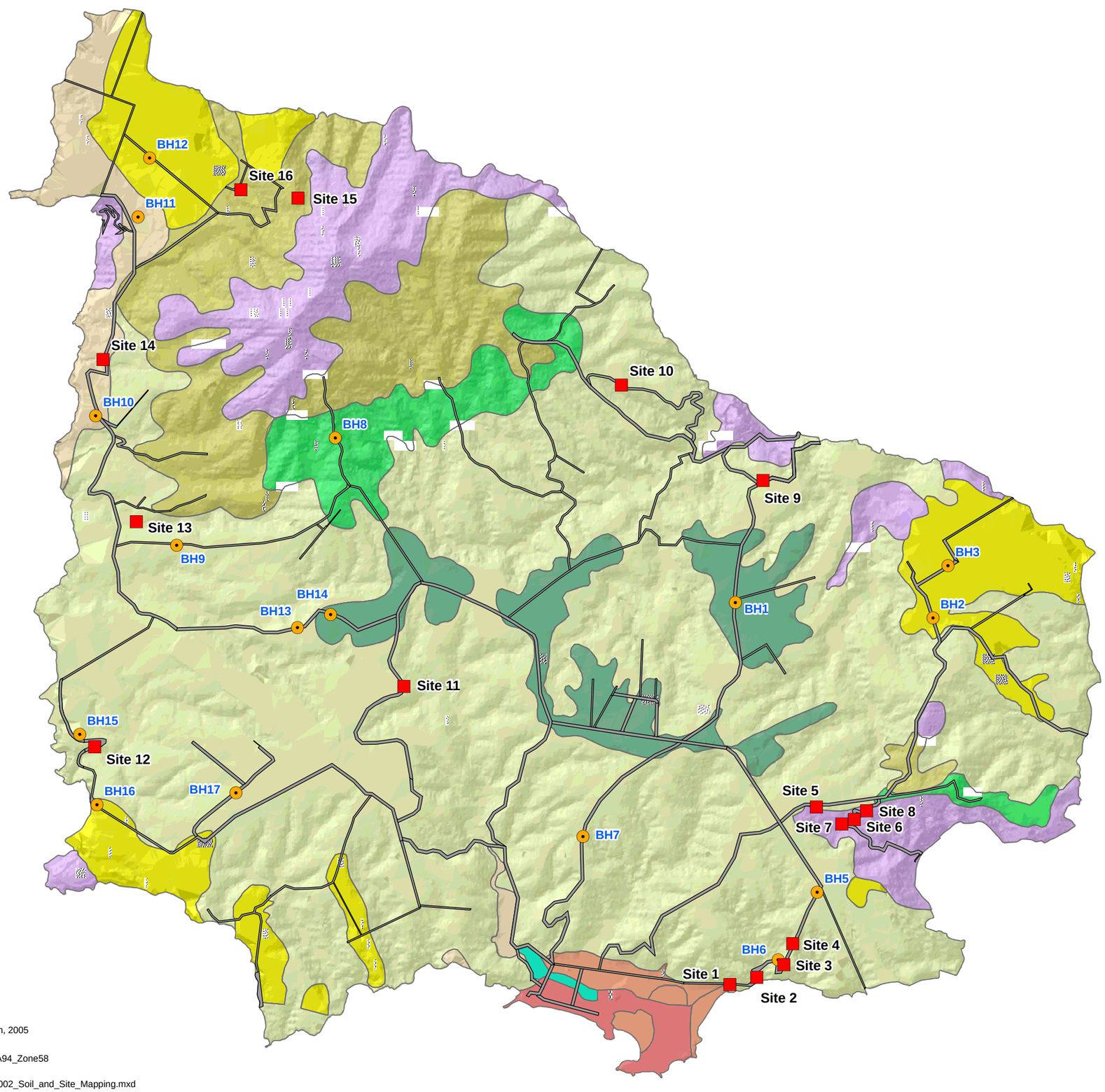

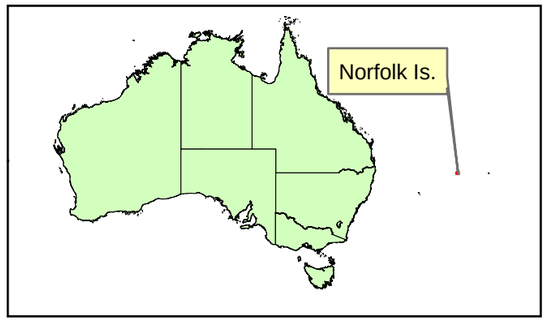

Site Mapping Location

Borehole

Soil Types *

- Balsaltic Colluvuim mixed with calcareous sand
- Emily Bay calcareous sand
- Middlegate gravelly clay
- Mt Pitt Clay
- Palm Glen clay
- Rooty Hill Clay
- Selwyn Clay
- Steeles Point Clay
- Unnamed shallow stony soils on basalt
- Unnamed swamp soil
- Soil Types

* After Stephens & Hutten, 1954

N

0 500 1,000 Meters

SWD - 10 Jun, 2005

GDA94_MGA94_Zone58

2110268A_2002_Soil_and_Site_Mapping.mxd

PARSONS BRINCKERHOFF

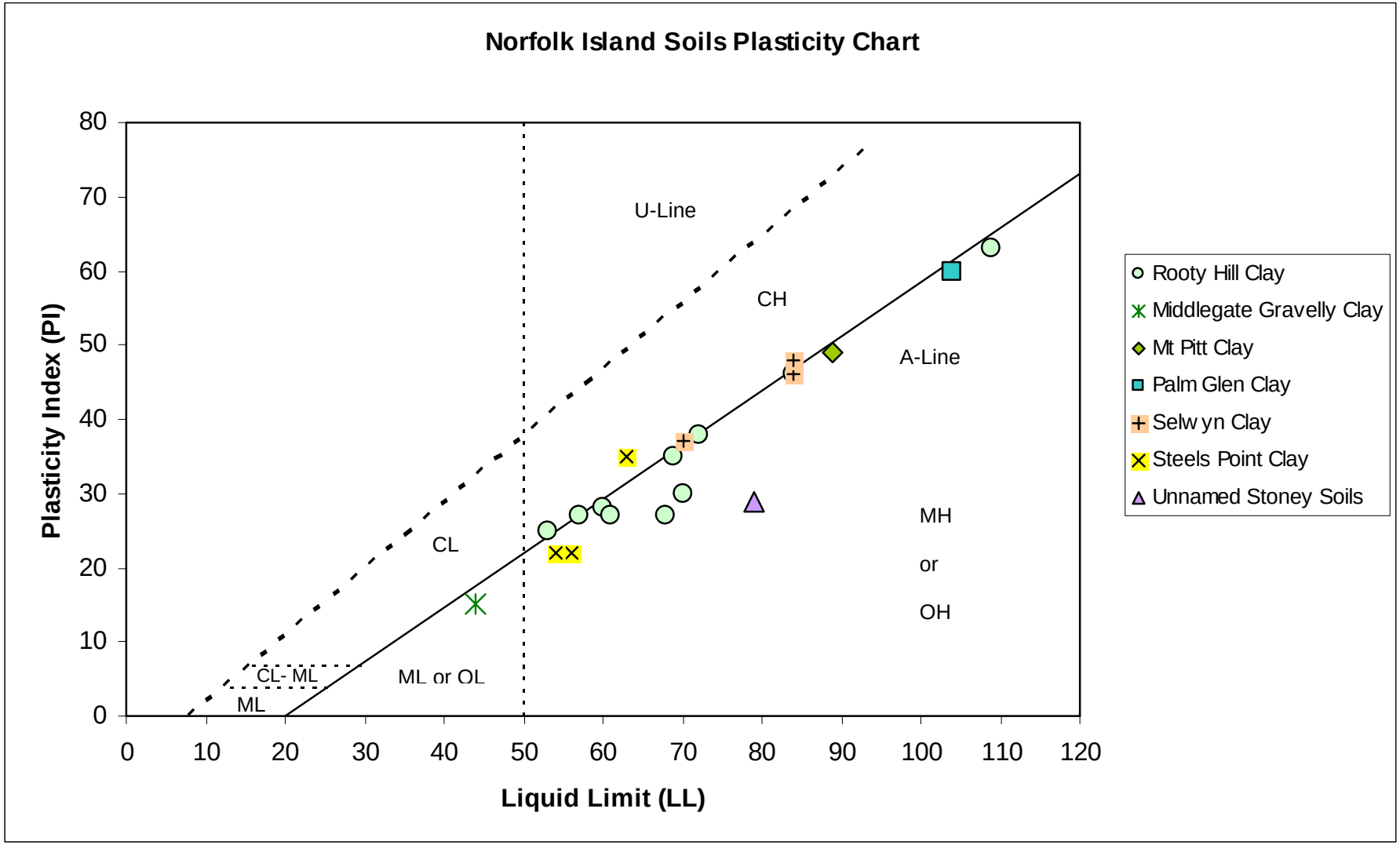

Figure 4: Plasticity Chart